Port Hueneme Water Agency

250 North Ventura Road • Port Hueneme, CA 93041 • (805) 986-6563

PORT HUENEME WATER AGENCY BOARD OF DIRECTORS
ADJOURNED REGULAR MEETING

JANUARY 13, 2016
4:00 PM

PORT HUENEME CITY HALL - CITY COUNCIL CHAMBER
250 NORTH VENTURA ROAD
PORT HUENEME, CA 93041

A G E N D A

1. CALL TO ORDER, ROLL CALL

2. AGENDA: *(Amend / Approve)*

3. BOARD REORGANIZATON:

A. OATH OF OFFICE
Action: Agency Clerk to administer Oath of Office to incoming Ex-Officio Member, Department of Defense Liaison Robert Nordahl.

B. NOMINATE CHAIR AND VICE CHAIR OF THE PORT HUENEME WATER AGENCY BOARD
Action: It is recommended the Board nominate and appoint a Chair (from CIBCSD) and Vice Chair (from COPH) to serve a one-year term.

C. APPOINTMENT TO THE ASSOCIATION OF WATER AGENCIES OF VENTURA COUNTY BOARD OF DIRECTORS
Action: It is recommended the Board select two Directors to serve as Member-at-Large and Alternate Representative to the Association of Water Agencies of Ventura County ("AWA") Board of Directors, to serve a two-year term for 2016 and 2017.

4. BUSINESS ITEMS:

A. APPROVAL OF MINUTES
Action: It is recommended the Board approve the Minutes of the November 18, 2015 Adjourned Regular Meeting.

B. CASH DISBURSEMENTS RATIFICATION
Action: It is recommended the Board ratify the cash disbursements listing for the period November 12, 2015, through November 27, 2015.

C. BRACKISH WATER RECLAMATION DEMONSTRATION FACILITY - OPERATIONAL PERFORMANCE
Action: It is recommended the Board receive and file this report.

D. WATER SUPPLY STRATEGY REPORT FROM WATER CONSULTANCY INC.
Action: (Informational Only.)

E. THIRD STAGE REVERSE OSMOSIS PROJECT UPDATE
Action: Presentation by KEH of the Third Stage Reverse Osmosis Project preliminary design report.

5. BOARD MEMBER REPORTS AND COMMENTS:

A. REQUEST OF MEMBER MOORE: DISCUSSION OF PHWA LEGAL SERVICES
Action: Member Moore recommends the Board discuss the desire to seek outside legal services for PHWA and take such additional, related action that may be desirable.

6. NEW BUSINESS TO BE AGENDIZED

7. OPEN FORUM: *(Anyone wishing to speak to the Board on any matter NOT on the Agenda may do so at this time. Please approach the podium and give your name and city of residence clearly for the record.)*

8. CLOSED SESSION (None)

ADJOURNMENT: Adjourn to the next Adjourned Regular Meeting to be held Wednesday, February 10, 2016 at 4:00 p.m. in the City Council Chamber.

Copies of staff reports or other written documentation relating to each item of business referred to in this Agenda are available for public inspection in the Office of the City Clerk and on the City's website at *www.cityofporthueneme.org*. Materials received after agenda packet distributions are made available to the public on the City's website and in the City Clerk's office at the same time they are provided to the Board. The public may address any item on the Agenda by submitting a speaker card to the Clerk prior to or during the time the matter is addressed by the Board. Speaker comments are limited to three minutes.

IN COMPLIANCE WITH THE AMERICANS WITH DISABILITIES ACT, IF YOU NEED SPECIAL ASSISTANCE TO PARTICIPATE IN THIS MEETING, CONTACT THE OFFICE OF THE CITY CLERK AT 986-6503 OR THE CALIFORNIA RELAY SERVICE. NOTICE 48 HOURS PRIOR TO THE MEETING WILL ENABLE THE CITY TO MAKE REASONABLE ARRANGEMENTS TO ALLOW PARTICIPATION IN THIS MEETING.

DEPARTMENT OF THE NAVY
NAVAL BASE VENTURA COUNTY
311 MAIN ROAD, SUITE 1
POINT MUGU, CA 93042-5033

01-06-16P03:04 RCVD

IN REPLY REFER TO:
5090
Ser N0000CV/1263
23 DEC 15

Mr. John Baker
Interim Executive Director
Port Hueneme Water Agency
250 North Ventura Road
Port Hueneme, CA 93041

Dear Mr. Baker:

This letter serves as notice to the Port Hueneme Water Agency (PHWA) that Naval Base Ventura County (NBVC) has designated a Department of Defense (DoD) Liaison to the PHWA Board, replacing all others previously designated regardless of title having been used to officially represent NBVC in discussions of matters of mutual interest with your board. Starting January 13, 2016, Mr. Robert Nordahl will serve as the Navy's representative on the board. If the name of this liaison is to be listed on your website or letterhead, the term "DoD Liaison" must be included.

Mr. Nordahl will serve as DoD Liaison pursuant to the DoD Joint Ethics Regulations, Sections 3-201 and 3-202. The opinions of the DoD Liaison do not bind the DoD or any of its components. Enclosed is the Navy designation letter for your reference. In accordance with Federal Acquisition Regulation 1.602-1(a) only "Contracting Officers have authority to enter into, administer, or terminate contracts and make related determinations and findings." The Contracting Officer is your primary and direct point of contact for all contractual matters. This person is Mr. Richard Spagnuolo. Please have all future board agendas sent to the DoD Liaison at robert.nordahl@navy.mil and direct any contractual inquiries and documentation to richard.spagnuolo@navy.mil.

If you have any questions or need further information, please contact CDR Paul Chan at (805) 989-9772 or email paul.chan1@navy.mil.

Sincerely,

C. D. JANKE
Captain, U. S. Navy
Commanding Officer

3A

DEPARTMENT OF THE NAVY
NAVAL BASE VENTURA COUNTY
311 MAIN ROAD, SUITE 1
POINT MUGU, CA 93042-5033

01-06-16P03:04 RCVD

IN REPLY REFER TO:
5090
Ser N0000CV/1264

23 DEC 15

From: Commanding Officer, Naval Base Ventura County
To: Mr. Robert Nordahl, UEM Branch Head

Subj: DESIGNATION AS THE NAVAL BASE VENTURA COUNTY DEPARTMENT OF DEFENSE LIAISON TO THE PORT HUENEME WATER AGENCY GOVERNING BOARD

Ref: (a) Port Hueneme Joint Powers Agency Agreement of 20 Jul 94
(b) Department of Defense Joint Ethics Regulations, Sections 3-201 and 3-202

1. In accordance with references (a) and (b), you are designated as the Department of Defense (DoD) Liaison to the Port Hueneme Water Agency (PHWA) Governing Board. Please familiarize yourself with these references which describe your role and limitations as a DoD Liaison with regard to discussions of matters of mutual interest with the subject non-federal entity.

2. You will attend the regularly scheduled PHWA Board meetings, provide command approved information and collect information applicable to Naval Base Ventura County (NBVC).

3. You will keep your chain-of-command informed of issues related to the continued supply of potable water to NBVC and prepare summary reports of the attended meetings.

4. This designation will remain in effect until you are specifically relieved or transferred from NBVC.

C. D. JANKE

Port Hueneme Water Agency

250 North Ventura Road • Port Hueneme, CA 93041 • (805) 986-6563

AGENCY AGENDA STAFF REPORT

TO: PHWA Board

FROM: Chris Theisen, Public Works Director

SUBJECT: NOMINATE CHAIR AND VICE CHAIR OF THE PORT HUENEME WATER AGENCY BOARD

DATE: January 13, 2016

RECOMMENDATION:

It is recommended the Board nominate and appoint a Chair (from CIBCSD) and Vice Chair (from COPH) to serve for a one-year term.

BACKGROUND/ANALYSIS:

The "Agreement for Formation of a Joint Powers Agency" dated July 20, 1994 sets the procedures for the election of the PHWA Chair and Vice Chair as they are listed below:

Section 8. Governing Board Procedures

k. Election of Chair and Vice-Chair

(1) Annually at its first regular meeting of a calendar year, the Governing Board shall select one of its regular directors to hold the position of Chair of the Governing Board, and a second regular director to hold the position of Vice Chair of the Governing Board. The Chair shall conduct all meetings of the Governing Board and perform such other duties and functions as required of such person by this Agreement, the Bylaws or the Governing Board. The Vice Chair shall serve as Chair in the absence of the Chair and shall perform such duties as may be required by this Agreement, by the Chair, the Governing Board or the Bylaws.

(2) At the first organizational meeting of the Governing Board, a regular director designated by the City pursuant to Section 5.a. shall be elected as Chair of the Governing Board and a regular director designated by th

3B

District pursuant to Section 5.a. shall be elected as Vice Chair of the Governing Board, for terms expiring on the date of the first regular meeting of the Governing Board held in 1996.

(3) Thereafter, the Chair and Vice Chair positions on the Governing Board shall be rotated on an annual basis between regular directors from the City and District, respectively. Following the initial period, the parties agree that the position of Chair of the Governing Board shall be filled by a regular director from the City in odd-numbered calendar years beginning in 1997 (1997, 1999, etc.), and by a regular director from the District in even-numbered calendar years beginning in 1996 (1996, 1998, etc.). Conversely, the Vice-Chair position shall be filled by a regular director from the City in even-numbered calendar years beginning in 1996 (1996, 1998, etc.) and by a regular director from the District in odd-numbered calendar years beginning in 1997 (1997, 1999, etc.).

(4) If there is a vacancy, for any reason, in the position of Chair or Vice Chair, the Governing Board shall forthwith conduct an election and fill such vacancy for the unexpired term of such prior incumbent, from either the regular directors of City or District depending on the year of vacancy.

FISCAL IMPACT:

The action, if taken as recommended, will not have a fiscal impact.

Port Hueneme Water Agency

250 North Ventura Road • Port Hueneme, CA 93041 • (805) 986-6563

AGENCY AGENDA STAFF REPORT

TO: PHWA Board

FROM: Chris Theisen, Public Works Director

SUBJECT: APPOINTMENT TO THE ASSOCIATION OF WATER AGENCIES OF VENTURA COUNTY BOARD OF DIRECTORS

DATE: January 13, 2016

RECOMMENDATION:

It is recommended the Board select two Directors to serve as Member-at-Large and Alternate Representative to the Association of Water Agencies of Ventura County ("AWA") Board of Directors, to serve a two-year term for 2016 and 2017.

BACKGROUND/ANALYSIS:

The AWA Nominating Committee is requesting that the Port Hueneme Water Agency maintain its seat for the next two-year term of 2016 and 2017. Board Director Moore is currently serving as PHWA's Member-at-Large and Director Breeze as alternate for the 2014-15 term.

Should the PHWA Board accept this invitation to continue its work on the AWA Board, staff will inform AWA of the appointed PHWA Director and Alternate immediately, as the installation of directors is scheduled to take place March 17, 2016.

FISCAL IMPACT:

The action, if taken as recommended, will not have a fiscal impact.

3C

PORT HUENEME WATER AGENCY BOARD
ADJOURNED REGULAR MEETING

NOVEMBER 18, 2015

MINUTES

Vice Chair Estomo called the meeting to order at 4:00 p.m. in the City Council Chamber at Port Hueneme City Hall, 250 North Ventura Road, Port Hueneme, California. The Agency Clerk called the roll:

PRESENT: Board Members Douglas A. Breeze, Keith Moore, Sylvia Muñoz Schnopp, Jonathan Sharkey; Ex-Officio Member Alicia Thompson; Vice Chair Jim Estomo.

ABSENT: None.

STAFF PRESENT: Cynthia Haas, Executive Director; Karl Berger, Deputy Agency Counsel; Alvin Burrell, Interim Finance Director; Chris Theisen, Public Works Director; Steven Hickox, Water Superintendent; Michelle Ascencion, Agency Clerk.

AGENDA:

The Board had previously received copies of the Agenda.

Member Sharkey, seconded by Member Schnopp, moved to approve the Agenda as presented. Motion carried unanimously.

BOARD REORGANIZATION:

A. OATH OF OFFICE
Action: Agency Clerk to administer Oath of Office to incoming Board members Sylvia Muñoz Schnopp and Jonathan Sharkey.

The Agency Clerk administered the Oath of Office to Members Schnopp and Sharkey.

B. NOMINATE CHAIRPERSON FOR PORT HUENEME WATER AGENCY BOARD
Action: It is recommended the Board nominate and appoint a Chair (from COPH) to complete the current term.

Member Breeze, seconded by Member Schnopp, nominated Member Sharkey to serve as Chair. No further nominations were made. Motion carried 4-0-1 (Moore abstained).

BUSINESS ITEMS:

A. APPROVAL OF MINUTES
Action: It is recommended the Board approve the Minutes of the October 14, 2015 Adjourned Regular Meeting.

Member Breeze, seconded by Member Schnopp, moved to approve the Minutes as presented. Discussion ensued among the Board and staff. Motion carried 4-0-1 (Sharkey abstained).

B. CASH DISBURSEMENTS RATIFICATION
Action: It is recommended the Board ratify the cash disbursements listing for the period September 25, 2015 through November 11, 2015.

Member Breeze, seconded by Member Schnopp, moved to approve staff's recommendation as presented. Motion carried 5-0.

C. BIWATER INC. WATER QUALITY ANALYSIS AND PILOT TESTING
Action: It is recommended the Board direct staff to perform all water quality analysis associated with a pilot test by Biwater, Inc.

The Water Superintendent gave a brief report and introduced Richard White of Biwater and Phil Christofferson of American Water Chemicals, who gave reports. Discussion ensued among the Board, staff, Mr. White, and Mr. Christofferson.

Member Moore, seconded by Member Breeze, moved to approve staff's recommendation as presented. Motion carried 5-0.

D. THIRD STAGE REVERSE OSMOSIS PROJECT UPDATE
Action: It is recommended the Board receive and file this report.

The Public Works Director gave a report. Discussion ensued among the Board and staff.

Member Moore, seconded by Member Breeze, moved to approve staff's recommendation as presented. Motion carried 5-0.

E. BRACKISH WATER RECLAMATION DEMONSTRATION FACILITY - OPERATIONAL PERFORMANCE
Action: It is recommended the Board receive and file this report.

The Water Superintendent gave a report. Discussion ensued among the Board and staff.

Member Schnopp, seconded by Member Moore, moved to approve staff's recommendation as presented. Motion carried 5-0.

F. WATER SUPPLY STRATEGY REPORT FROM WATER CONSULTANCY INC.
Action: (Informational Only.)

The Public Works Director gave a brief report. Discussion ensued among the Board and staff.

G. SUSTAINABLE GROUNDWATER MANAGEMENT ACT
Action: It is recommended the Board receive and file this report.

The Water Superintendent gave a report. Discussion ensued among the Board, staff, and Jared Bouchard, Channel Islands Beach Community Services District General Manager.

Member Schnopp, seconded by Member Moore, moved to approve staff's recommendation as presented. Motion carried 5-0.

BOARD MEMBER REPORTS AND COMMENTS:

A. REQUEST OF MEMBER BREEZE: DISCUSSION OF THE FREQUENCY AND SCHEDULING OF PHWA BOARD MEETINGS
Action: Member Breeze recommends the Board discuss and take possible action on the PHWA Board meeting schedule.

Member Breeze gave a report. Discussion ensued among the Board Members.

Member Breeze, seconded by Member Schnopp, moved to change the Board meeting schedule to the third Mondays of the month, to start at least one-and-a-half hours before the City Council meeting. Further discussion ensued.

Member Breeze, seconded by Member Moore, made a substitute motion to continue the item to the March 2016 meeting. Motion carried 5-0.

Member Schnopp reported on attending a recent meeting of the Governor's Committee on Drought Preparedness.

Member Moore commended the Public Works Director on his recent presentation to the Association of Water Agencies' Water Issues Committee.

NEW BUSINESS TO BE AGENDIZED:

Member Moore requested that the next Board agenda include an item to discuss the Board's desire to obtain separate legal counsel apart from the City Attorney's office. The request was approved 3-2 (Schnopp, Sharkey opposed).

OPEN FORUM:

Chair Sharkey asked if anyone present wished to speak on any matter not on the Agenda. No one requested to speak.

CLOSED SESSION: None.

ADJOURNMENT:

Chair Sharkey, without objection, adjourned the meeting at 5:33 p.m. to the next Adjourned Regular Meeting to be held Wednesday, December 9, 2015 at 4:00 p.m. in the City Council Chamber.

Respectfully submitted,

_____
Michelle Ascencion, CMC
Agency Clerk

APPROVED:

_____
CHAIR

PORT HUENEME WATER AGENCY
CASH DISBURSEMENTS
For the period November 12, 2015 through November 27, 2015

January 13, 2016

Presented are the cash disbursements issued by the Finance Dept. for the period November 12, 2015 through November 27, 2015. Shown are cash disbursements by date of occurrence and type of payment.

Date	Type of Payment	Attachment	Amount
November 12, 2015 - November 27, 2015			
	A/P Checks 5274-5278	A	$248,632.41
Total			**$248,632.41**

4B

ATTACHMENT A

Transactions for 11/12/2015 - 11/27/2015

Date: 12/2/2015

Vendor Name	Description	Check Date	Number	Amount
CITY OF OXNARD	SEP'15 SERVICES	11/13/2015	5274	43,418.55
HENSLEY, MARK	OCT'15 SERVICES	11/19/2015	5275	1,672.90
KEH & ASSOCIATES, INC	OCT'15 SERVICES	11/19/2015	5276	23,414.80
UNITED WATER CONSERVATION DISTRICT	CBC0001 020-0110	11/19/2015	5277	812.83
UNITED WATER CONSERVATION DISTRICT	CBC0001 020-0110	11/19/2015	5277	20.28
UNITED WATER CONSERVATION DISTRICT	HUE0001 020-0090	11/19/2015	5277	38,602.81
UNITED WATER CONSERVATION DISTRICT	PHW0002 020-0125	11/19/2015	5277	135,980.02
UNITED WATER CONSERVATION DISTRICT	PHW0002 020-0125	11/19/2015	5277	3,150.22
WATER CONSULTANCY, INC	SERVICES THRU 10/31/15	11/19/2015	5278	520.00
WATER CONSULTANCY, INC	SERVICES THRU 10/31/15	11/19/2015	5278	1,040.00
				$248,632.41

Port Hueneme Water Agency

250 North Ventura Road • Port Hueneme, CA 93041 • (805) 986-6563

AGENCY AGENDA STAFF REPORT

TO: PHWA Board

FROM: Chris Theisen, Public Works Director

SUBJECT: BRACKISH WATER RECLAMATION DEMONSTRATION FACILITY - OPERATIONAL REPORT

DATE: January 13, 2016

RECOMMENDATION:

It is recommended the Board receive and file this report.

BACKGROUND/ANALYSIS:

This report presents an update on the operational status of the Brackish Water Reclamation Demonstration Facility (BWRDF) from November 1, 2015 to December 23, 2015.

During this operational reporting period, the overall PHWA demand averaged 2.1 MGD with United Water supplying 90 percent and Calleguas supplying 10 percent. There were no interruptions of service, and the water quality delivered to each of the PHWA customers continues to meet all State and Federal regulatory standards.

The Silt Density Index (sampled twice a day) averaged 3.6 and the BWRDF was in by-pass mode during the report period. Operations staff will continue to monitor United's water quality to determine when this source is permissible for membrane treatment. While in by-pass mode, a blend of United water with Calleguas water will be dictated by system demand periods and source water availability to maximize our take of United's water supply.

4C

SUMMARY OF OPERATING COMMITTEE MEETING:

On October 22, 2015 the Operating Committee met with the Fox Canyon Groundwater Management Agency (FCGMA) and United Water Conservation District (UWCD) to discuss PHWA groundwater credit transfers. PHWA was informed that these agencies will view PHWA as a single entity and not individual agencies with regard to groundwater credits. (Individual PHWA member agency accounting is the responsibility of the PHWA.)

On November 9, 2015 the Operating Committee met to discuss how the groundwater credit transfers can be completed internally using the Board approved accounting methodology. The Water Superintendent will update the spreadsheets and present a draft of the transfer to the Operating Committee for review. Once approved by the operating committee, staff will present the internal transfers to the Board for final approval.

NEXT PHWA BOARD MEETING

The next PHWA Board meeting is scheduled for February 10, 2016 at 4:00 p.m.

FISCAL IMPACT:

The action, if taken as recommended, will not have a fiscal impact.

Water Consultancy

January 4, 2016

Memorandum

To: Mr. Chris Theisen, Director of Public Works
City of Port Hueneme

From: Lynn M. Takaichi

Subject: Status Report No. 4
PHWA Water Supply Strategy Implementation
WC-023

This memorandum summarized activities performed from receipt of the task order on July 23, 2015 to January 4, 2016.

During this period, I attended 2 meetings (7/23 and 8/5) with PHWA staff to discuss the upcoming meeting with the City of Oxnard on 8/6. During the Oxnard meeting, PHWA's primary contractual issues were discussed. Oxnard indicated that although it needs to wait until its expansion requirements have been assessed but, in any event, would like to modify the land lease agreement. In addition, because United Water Conservation District's new General Manager was not scheduled to begin work until 8/10, it was agreed that a meeting request with United would be postponed until he had introduced himself to United's stakeholders.
In September, I prepared a markup of the OH Pipeline Agreement that incorporated PHWA's concerns. The markup was reviewed by staff and modifications were also incorporated. On October 14, 2015, I met with PHWA staff and attended the PHWA Board meeting.

On November 9, 2015, I attended a meeting with Oxnard to discuss the need to meet with United. On November 23, 2015, I attended a meeting with PHWA, CIBCSD, Oxnard and United to initiate renegotiation of the OH Pipeline Agreement. We outlined our primary issues and emphasized the need to accelerate the negotiations. United agreed to provide more detailed information regarding the operations and finances of the OH Pipeline and a meeting in early January was set up. On December 8, I attended a meeting of the OH Pipeline contractors to outline our concerns and establish an agenda for subsequent meetings. Another meeting was scheduled for January 5.

4D

Date: December 2, 2015

To: Steve Hickox, Port Hueneme Water Agency

From: Ryan Gallagher, PE, KEH & Associates, Inc.
Chelsea Cotton, KEH & Associates, Inc.
Mark Donovan, PE, GHD

Project No: Port Hueneme Water Agency (PHWA-01-15), Task Group 2 – Preliminary Design

Subject: Third Stage Reverse Osmosis Preliminary Design Report

1. Introduction and Background

1.1 Background

The Port Hueneme Water Agency (PHWA) consists of the City of Port Hueneme, Channel Islands Beach Community Services District, Naval Construction Battalion Center – Port Hueneme and Naval Air Weapons Station – Point Mugu. PHWA implemented the Water Quality Improvement Program in 1994 in an effort to address overdraft of the local groundwater basin, seawater intrusion, and poor groundwater quality. As part of a Water Quality Improvement Program, PHWA commissioned the Brackish Water Reclamation Demonstration Facility (BWRDF) in 1999. The original system included Electrodialysis Reversal (EDR), Nanofiltration (NF1) and Reverse Osmosis (RO). In 2010 PHWA replaced the EDR system with an additional NF system (NF2). The NF system was determined to be the most economical treatment option for meeting water quality goals. The overall BWRDF system is illustrated in **Figure 1-1**.

Figure 1-1. Existing System Schematic

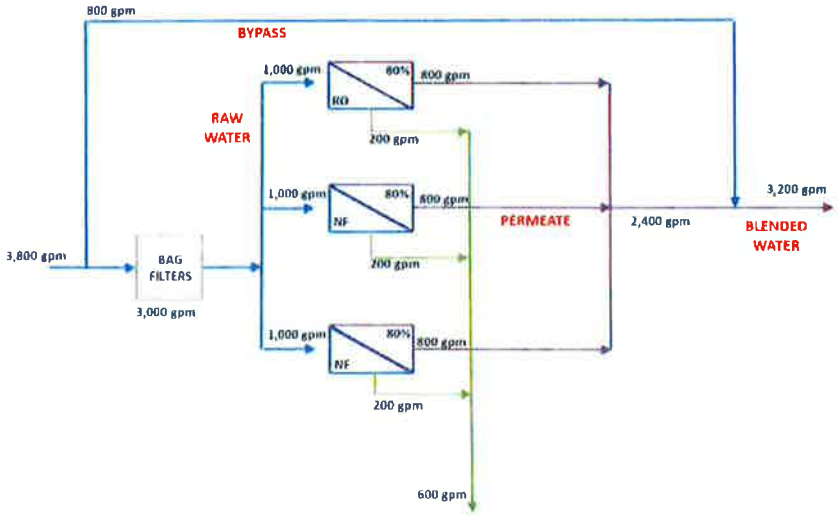

4E

As illustrated in **Figure 1-1**, the three membrane treatment systems, each producing approximately one million gallons per day (MGD), plus a blend stream produce up to 4 MGD which is delivered to the PHWA member agencies. The BWRDF feed water and blend water utilizes chloraminated groundwater delivered by United Water Conservation District (UWCD). Water received from UWCD at the BWRDF is filtered using a bag filter to remove any debris and particulate matter prior to being supplied to the three membrane systems. If the raw water is delivered with excessive free chlorine, aqueous ammonia is injected upstream of the membrane systems. The RO and both NF systems have a two stage membrane array and operate in parallel with a raw water blend to produce the plant's 4 MGD. The two NF systems are pictured in **Figure 1-2**.

Figure 1-2. Existing NF2 System

PHWA currently operates with either one, two or all three primary membrane systems at one time depending on distribution system demand. In addition to meeting system demand through increasing the number of skids in operation, PHWA also maintains an imported water connection, supplied by Calleguas Municipal Water District (CMWD). This connection can provide additional supply when demand exceeds the facility's maximum capacity or when the facility is offline.

Facing water supply challenges related to both imported and groundwater supply sources, PHWA is seeking to increase the recovery of the existing membrane systems by treating the brine, and therefore reducing the amount of waste going to sewer. To meet this objective, PHWA selected KEH & Associates in September 2015 to evaluate the feasibility and develop a Preliminary Design Report (PDR) related to increasing the recovery of the existing systems.

2. Scope of Work

The purpose of the PDR is to define the project elements for pre-treatment, chemical systems, facility integration and system components required to increase the recovery of the existing membrane systems. Based on the identified project, the PDR also includes a financial analysis and projected performance. The following sections, as defined in the scope of work for Project Agreement #15-1172, will be utilized in the PDR to meet these objectives:

1. **Section 1 Introduction and Background** - Background information that can be utilized for the grant applications.
2. **Section 2 Scope and Objective** – Reference scope of work and summarize PDR objectives.
3. **Section 3 Water Quality and Design Criteria** – This section will summarize the influent water quality and flows.
4. **Section 4 Pre-Treatment and Membrane System** – Based on the water quality information provided by PHWA, membrane projections will be completed (up to 5 based on various water quality scenarios), pre-treatment strategy to prepare water for the third stage RO, ancillary modifications (i.e. chemical systems, pipe connections), membrane treatment unit design criteria and key assumptions, and post-treatment/blending needs.
5. **Section 5 Electrical** – This section describes the electrical system modifications, including the use of existing infrastructure.
6. **Section 6 Control Strategy** – This section describes the general control strategy and the integration of the unit into the overall strategy for the facility.
7. **Section 7 Economic Analysis** – An economic analysis will be provided that will take into consideration capital and annual costs for the new system. Engineer's estimate of construction/procurement cost will be provided. The construction cost estimates provided will be prepared as a Class 4 estimate in accordance with the Association of Cost Engineering International (ACEE) criteria. A Class 4 estimate is considered a concept study / feasibility estimate project detail up to 15% of full project definition. The construction estimate will be combined with estimated operational costs and project savings to determine the project's expected payback period and net present value.
8. **Section 8 Project Schedule** – This section presents the anticipated design, procurement, and construction schedule for the project.

3. Water Quality and Design Criteria

To meet the PHWA objective of increasing the recovery from the current rate of approximately 80 percent, PHWA has several options. Technologies such as reverse osmosis (RO), closed circuit desalination, advanced EDR/precipitation, and intermediate concentrate chemical stabilization are all feasible options for further optimizing the existing brine stream. These technologies were screened considering using the following criteria established with PHWA staff at the Project Kickoff Meeting on September 4, 2015:

- Marginal size of the brine stream (200 gpm to 600 gpm) will limit options that have a high capital cost
- Limited onsite area available for a new treatment unit, keeping the new system within the existing BWRDF will minimize cost for new structures
- Operations and maintenance needs must be minimal to reflect current staffing availability
- The project must have a reasonable payback period
- Due to cutbacks in groundwater supply there is a need to expedite this project; therefore, technologies that require extensive piloting are not preferred

Based on the criteria established by PHWA, the most suitable technology for the BWDRF is to continue with an RO unit similar to the existing systems. The system would operate as a third stage to the existing two stage membrane systems and would meet the increased recovery objective by further filtering the current brine waste stream.

The use of a third stage system to increase recovery is a proven approach and the technology required is firmly established with multiple vendors capable of supplying the necessary equipment. In addition, since the system is consistent with the current membrane systems, it will integrate with less effort than other treatment processes and will require the least of amount of additional staff training, operations and maintenance.

3.1 Water Quality

As noted in Section 1, the source water for the BWRDF is UWCD, which supplies chloraminated groundwater from inland, shallow aquifer wells. The shallow aquifer is recharged with surface water diverted from the Santa Clara River through spreading basins. The source water meets drinking water standards except for undesirable high total dissolved solids (TDS).

To further define the current water quality, PHWA provided data from various sources. The water quality data provided included feed water to the BWRDF from multiple years, and plant discharge (RO plus NF brine). Many of the samples did not include all the necessary constituents for a complete projection, or references were not provided for the source of the data. Additional sampling of the source water was requested for the upper aquifer, lower aquifer, UWCD blend, and the PHWA/UWCD inlet. The results of this recent sampling are in **Table 3-1**, which summarizes the data from the upper aquifer sampled on October 19, 2015.

Table 3-1:
Assumed Feed Water Quality

Constituent[1]	Units	Result
Aluminum	ug/L	ND
Barium	ug/L	24
Bicarbonate as HCO3	mg/L	216
Boron	mg/L	0.67
Calcium	mg/L	150
Carbonate as CO3	mg/L	ND
Chloride	mg/L	57
Fluoride	mg/L	0.74
Iron	ug/L	ND
Magnesium	mg/L	54
Manganese	ug/L	11
Nitrate as N	mg/L	7.6
pH	units	7.6
Phosphate	mg/L	ND
Potassium	mg/L	4.4
Silica	mg/L	16
Sodium	mg/L	92
Strontium	mg/L	1.4
Sulfate	mg/L	460
TDS	mg/L	1060

(1) Includes all constituents necessary for antiscalant and membrane performance projections.

In recent years the annual precipitation has been lower than the long term average which has led to reduced water levels in UWCD's primary upper aquifer. Due to the reduced aquifer levels, the UWCD source water PHWA is currently receiving is from their secondary lower aquifer. The quality of the lower aquafer is poorer, higher in iron, manganese and total TDS. UWCD plans to switch back over to the upper aquifer as it becomes replenished. As such, PHWA has directed that the evaluation for the PDR be based on the long term water quality (upper aquifer) and not the recent, temporary lower quality source (lower aquifer). Based on this decision, the data provided in Table 3-1, which reflects the water quality of the upper aquifer, will serve as the basis of design for the third stage RO system.

In the event that the water quality varies or the water source changes, the ability of the treatment system to treat the designed quantity of water may be impaired which could result in additional membrane replacements, chemical usage or reduced recovery.

3.2 Design Flow and Run Times

Each membrane skid at the BWRDF is capable of producing up to 1 MGD of product water. The skids are currently operated on an as needed basis with the priority being, the RO system, the NF1 system and then the NF2 system. The permeate stream from the membrane systems is combined with a bypass of raw water, at a ratio of approximately 3:1 based on historical data. This blend meets the water quality requirements for distribution.

PHWA provided SCADA data for the monthly system production of the three membrane skids and corresponding bypass volumes for the period from July 2013 to October 2014. This data is summarized in **Figure 3-1**.

Figure 3-1: RO-NF1-NF2 System Production

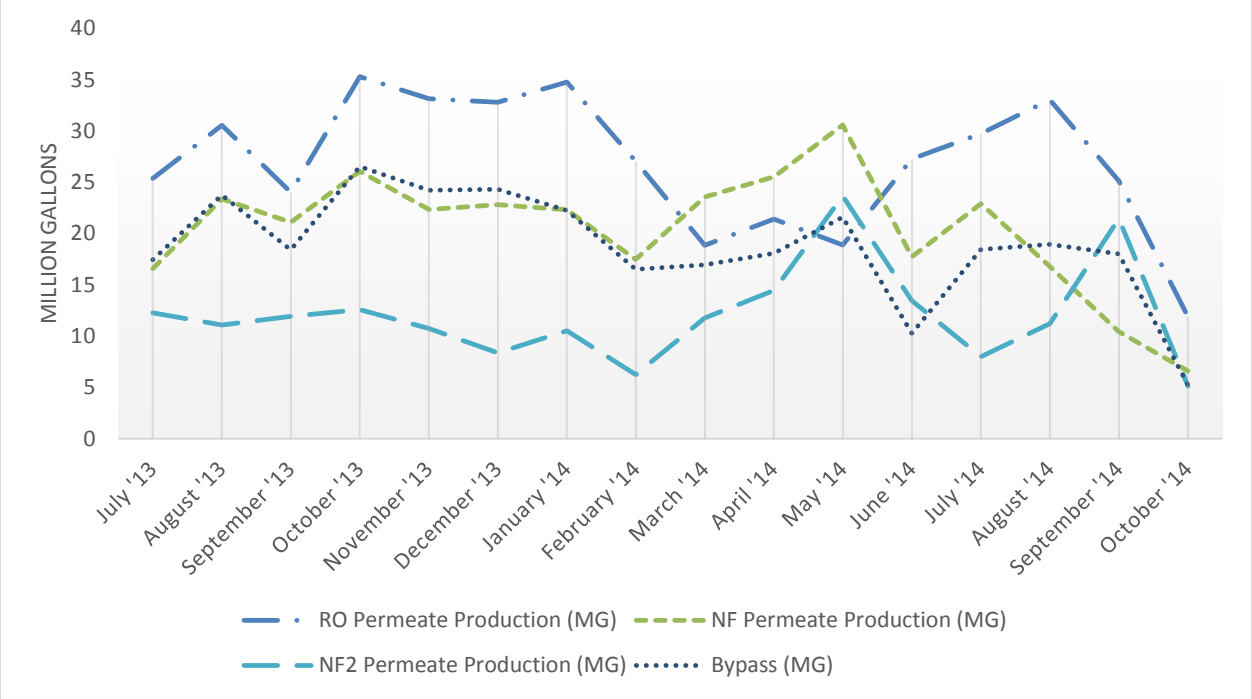

As demonstrated by **Figure 3-1**, the RO system runs just over 80 percent of the time, followed closely by the NF1 system which runs just under 80 percent of the time, and lastly the NF2 system which runs approximately 40 percent of the time. Between 2013 and 2014 the RO system produced almost 50 percent, NF1 produced approximately 30 percent and NF2 produced 20 percent of the total permeate supplied by the membrane systems.

After October 2014, UWCD switched over to the secondary lower aquifer which provides a poorer quality as described in Section 3.1. This reduction in water quality resulted in the reduced operating time illustrated near the October 2014 period in Figure 3-1.

In addition to the defining the approximate run times for each membrane system, the SCADA data provided by PHWA included information related to corresponding performance of each membrane system. The information was summarized and is provided as **Table 3-2.**

Table 3-2:
Existing Membrane System Flows and Recoveries

Treatment System	Avg. Feed Flow (GPM)	Avg. Permeate Flow (GPM)	Avg. Brine Flow (GPM)	Recovery (%)
RO	982	786	196	80.0
NF1	888	710	178	79.9
NF2	913	729	184	79.8

As demonstrated by **Table 3-2,** all three systems are currently operating at approximately 80 percent recovery. The 20 percent brine water is currently being sent to the City of Oxnard Sewer System. In the future the brine may be sent to a recently constructed lift station that pumps the brine into the Salinity Management Pipeline (SMP), owned by the CMWD. The SMP will deliver the collected brine to an ocean outfall for discharge.

This information is used in the economic evaluation to determine the payback period for the third stage systems based on the run time of each of the three primary systems.

4. Pre-Treatment and Membrane System

4.1 Proposed Process Description

The proposed third stage RO system will consist of one to three independent third stage RO units, with the units utilizing the brine from the existing two stage membrane systems. Due to the fluctuation in operating frequency between the existing three primary membrane filtration systems, independent trains are recommended, which could be installed in phases (if desired) in order to maximize return on investment. The determination of one versus two versus three units and the final phasing will be dictated by the economic analysis. The proposed configuration is illustrated in **Figure 4-1**.

Figure: 4-1 Proposed Third Stage RO System Configuration

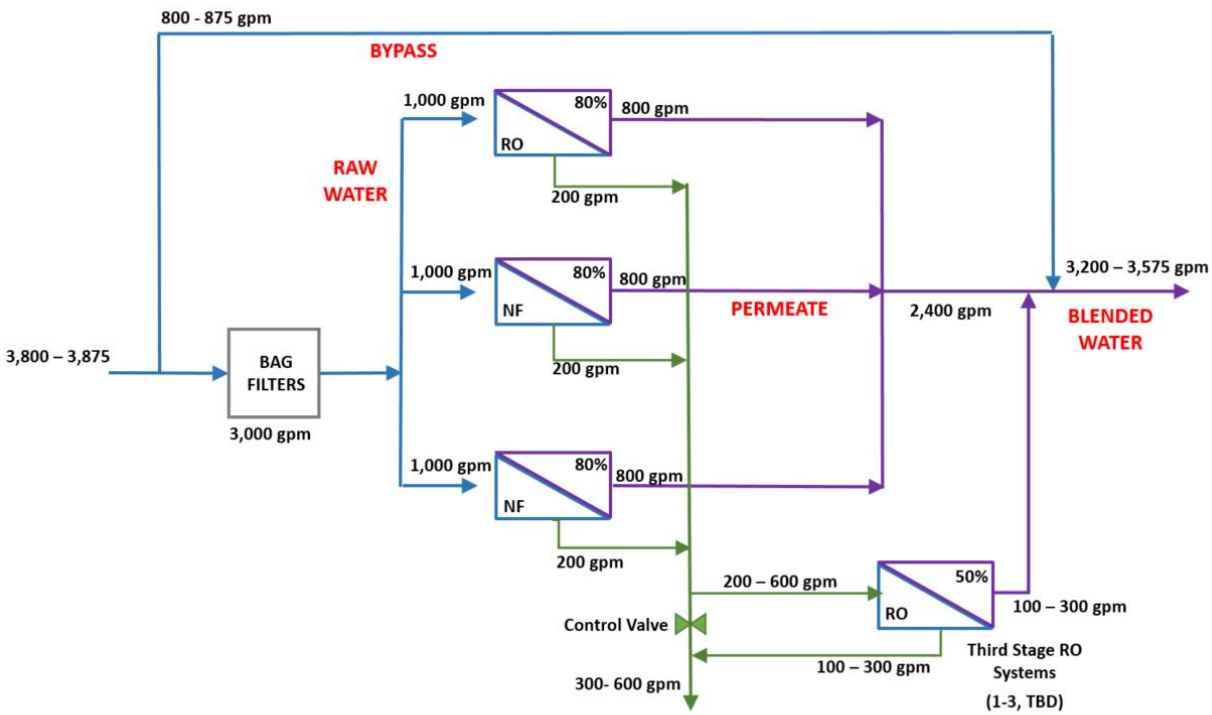

Based on the concept illustrated in **Figure 4-1** and the water quality data summarized in Section 3.1, preliminary design criteria was established and is presented in **Table 4-1.**

Table 4-1
Preliminary RO System Design Criteria

Parameter	Criteria
Number of Trains	3
Feed Flow to each Train	Maximum 200 gallons per minute
Anticipated Recovery	50%
Anticipated Permeate Flow per Train	Maximum 100 gallons per minute
Number of Stages per Train	1
Pressure Vessels Per Train	6
Number of Elements Per Pressure Vessel	6
RO Membrane Element Diameter and Area	8” Diameter, 400 sq ft, 34 mil feed spacer
Average Membrane Flux (gfd)	10
Third Stage Target Permeate TDS	Less than 75 mg/L
Cartridge Filter Pretreatment	5 micron
Chemical Dosing Pretreatment	Acid and Antiscalant
Booster Pump	60 hp
Booster Pump Feed Pressure	50 psi
Piping Material	316L SS high pressure piping Schedule 80 PVC low pressure piping

A common concentrate line from the primary units is recommended to feed the third stage RO units. This will allow for any primary system to feed any third stage unit and maximize operational flexibility. The primary systems will still be plumbed directly to drain as well as to the third stage systems to allow for partial operation or shutdown of these units.

Each third stage RO train will occupy a footprint of approximately 24 feet x 5 feet. Based on discussions with PHWA staff and the need to minimize capital cost, the optimal location for the new systems is adjacent to NF2. Drawing M-2 was developed to illustrate the approximate location, and is provided in **Appendix A**. The interior location eliminates the need to construct an enclosure or protective structure, and the proximity to the existing systems minimizes the length of interconnecting piping and simplifies construction.

Plumbing modification will be required along with the installation of the third stage system. The brine from the primary systems will be combined and then split between the third stage systems and the SMP outfall. The line to the SMP will require a control valve to maintain pressure from the primary systems to the inlets of the third stage systems. This allows any primary system to run with any third stage in addition to the SMP.

4.1.1 Pipe Sizing and Material

Each third stage RO unit will utilize the existing clean-in-place (CIP) system for cleaning. Any modifications to the existing CIP system, such as installing a bypass line, or throttling valve to achieve proper flow rates will be determined in the final design. Modifications to the existing CIP system are expected to be minor. The recommended interconnecting piping sizing and materials are summarized in **Table 4-2.**

Table 4-2
Third Stage System Piping and Material

Service	Diameter (inches)	Normal Pressure (psig)	Material
Booster Pump Suction	4	60	PVC Schedule 80
Booster Pump Discharge	4	250	316 Stainless Steel
Antiscalant Feed	1/2	70	PVC Schedule 80
Sulfuric Acid Feed	1/2	70	CPVC Schedule 80
Third Stage Permeate	3	15	PVC Schedule 80
Third Stage Concentrate	2	60	PVC Schedule 80
CIP Supply	4	15	CPVC Schedule 80
CIP Return	4	15	CPVC Schedule 80

To maintain regularity with the primary membrane systems at the BWRDF, all new instrumentation should be consistent with the PHWA standard manufacturers currently being used on the primary membrane systems. By maintaining standard equipment suppliers, PHWA can more efficiently stock spare parts, reduce system downtime by increasing equipment operator proficiency, and simplify operations at the facility. **Table 4-3** lists the approved equipment manufacturers for equipment to be supplied with the third stage systems.

Table 4-3
Preferred Equipment Manufacturers

Equipment	Description	Preferred Manufacturer
Flowmeter	Raw Water, Permeate, Brine	Sparling
Conductivity	Permeate	GLI
pH Analyzer	Raw Water, Permeate	GLI
Booster Pump	Third Stage Booster Pump	Goulds Pumps
Pump Motor	Third Stage Booster Pump	US Motors
Pressure Transmitter	Raw Water, Permeate, Brine	Rosemont
Membranes	RO Membranes	Dow Filmtech
Vessels	Third Stage System	Codeline

4.2 Chemical Pretreatment

Chemical addition for pretreatment consists of acid and antiscalant addition. The primary RO and NF systems receive a 2 mg/L dose of antiscalant upstream of their inlets to minimize and control chemical precipitation and scaling in their brine, and maximize recovery.

While additional antiscalant and acid could be added into the feed water of the existing primary systems, separate acid and antiscalant addition to the third stage RO units is recommended to maximize operational flexibility. Although each primary membrane system will produce a slightly different concentrate stream in terms of dissolved ionic constituents, the final design will assume a worst case scenario for the ionic composition of the combined feed water quality for the design of the acid and antiscalant dosing systems. It is important to note that different antiscalants from different suppliers cannot be used in the primary and third stage RO units separately, so selecting the optimum antiscalant for higher recovery operation will take place in future design phases.

The acid dosing system will only require one duty pump with sufficient range to add acid to the feed flow for either one, two, or all three third stage RO unit(s). This pump will be controlled based on pH.

The existing antiscalant pumps have sufficient turndown to dose either before the primary systems or before the third stages. It is possible for the system to run with either configuration, with the antiscalant dosed before the primary systems, or after the primary systems and before the third stage RO unit(s). In all locations the antiscalant dosage is calculated based on the projected brine constituents and then adjusted by hand.

PHWA currently uses Flow Motion chemical pumps. To maintain consistency with spare parts and existing chemical systems, any new or replacement pumps should match the existing chemical systems.

Existing Antiscalant Pump

- Manufacturer: Flow Motion
- Pump Model: FR1177L-177

Modeling was performed using vendor specific antiscalant projection software to determine a suitable antiscalant for the given water quality of the Primary membrane filtration brine streams. This information can be found in **Appendix B**. It was determined that a maximum recovery of 50 percent was possible using antiscalant with the addition of acid for pH adjustment.

Adjustment of pH with sulfuric acid from 7.89 to 7.5 allowed for a recovery of 50 percent. Calcium carbonate, Silica, and Calcium Phosphate are all close to being the limiting factor for maximum recovery.

It should be noted that other chemical antiscalant suppliers may also have suitable products, and a full review of various products and costs will be done in the final design stage.

It is also important to note that any changes in the assumed water quality, such as the presence of iron, manganese, aluminum, etc., could have an effect on the amount of acid and antiscalant consumption required, and possibly recovery.

Table 4-4 summarizes the antiscalant and sulfuric acid application points and dose rate.

Table 4-4 Chemical Dosing	
Chemical and Application Point	**Dose**
AWC[1] A-102 Ultra Antiscalant (or equal) dosed into Primary RO Feedwater at 80% Recovery	~1 mg/L
AWC A-102 Ultra Antiscalant (or equal) dosed into third Stage RO Feedwater at 50% Recovery	~3 mg/L
Sulfuric Acid dosed into third Stage RO Feedwater at 50% recovery	Approximately 44 mg/L, to pH 7.5

(1) American Water Chemicals, Inc. (AWC)

Table 4-5 shows the approximate consumption of antiscalant and acid for a **single** Primary and third stage RO unit.

Table 4-5 Chemical Consumption	
Chemical	**Quantity [1]**
Antiscalant	10.5 lb/day 315 lb/month
Sulfuric Acid (98%)	100 lb/day 3,000 lb/month

(1) Consumption per single primary and third stage unit.

4.3 RO Membrane Projected Performance

Modeling was performed using ROSA RO Projection software from Dow to estimate the third stage RO system performance assuming 50 percent recovery. System projection information can be found in **Appendix C**. Two different brackish water membrane types were investigated, each with 400 square feet of membrane area and 34 mil feed spacers, which are membrane element design features used to reduce fouling. A higher rejection type membrane (BW30XFR), and a lower energy type membrane (XFRLE) were modeled to investigate the trade-off in performance between higher feed pressure and lower permeate TDS. The feed pressures and projected permeate TDS are shown in **Table 4-6**.

Table 4-6 Third Stage System Membrane Projections		
RO Membrane	**Projected Feed Pressure (psi)**	**Projected Permeate TDS (mg/L)**
BW30XFR-400/34i	163	34
XFRLE-400/34i	122	44

Table 4-6 shows that the lower energy type membrane (XFRLE) operates at 40 psi less feed pressure and can produce permeate with a TDS of approximately 45 mg/L, which is acceptable for this application.

A more thorough analysis of additional membrane manufacturer's products will be conducted in the final design.

4.4 Post Treatment

The permeate stream from the third stage systems will be distributed back to the common permeate header upstream of the water quality sensor, which will minimize changes to the current post treatment systems. The third stage permeate will be low in pH (approximately 6) due to the presence of CO_2, which is the result of the high alkalinity and addition of acid into the third stage RO feed. Final product water quality characteristics will ultimately be a function of the performance of the Primary RO and NF system, and the amount of blended raw water that is used, in conjunction with the product water quality from the third stage systems. All of these factors will be considered in the final design to determine the best method for post treatment of the blended streams.

In this preliminary design, additional dosing of 25 percent NaOH on the order of 60 mg/L into the third stage RO permeate has been assumed. This results in a daily consumption of approximately 36 lbs of 25 percent NaOH for each third stage system. This additional NaOH would be dosed through the existing injection point and utilize the existing NaOH chemical system pumps. Based on discussions in the kickoff meeting, PHWA confirmed that the existing caustic pumps have a wide operating range, so we have assumed additional NaOH dosing pumps are not required. Also, the requirements for additional sodium hypochlorite, ammonia, and fluorsilicic acid consumption are nominal, and since the dosing point will not be changed or impacted by the addition of a third stage RO unit, it has been assumed that the existing chemical dosing pumps can meet the requirements. The additional chemical dosing will be adjusted based on flow and sensor data, and programming changes.

A CO_2 degasifier is another option for removing CO_2 and increasing the pH, and may be a more long term economical solution. Although there is additional upfront capital costs for the degasifier system, the ongoing chemical costs are reduced. This will be further evaluated in the final design stage.

4.5 Salinity Management Pipeline Effluent Limitations and Discharge Specifications

Although the brine waste from the BWRDF currently discharges to the City of Oxnard Sewer System, it is assumed that the BWRDF may eventually discharge brine waste into the SMP. To understand the constraints of this discharge method, PHWA provided CMWD's Effluent Limitations for the SMP. Through projections, levels of the constituents in the brine can be estimated. When these projections are compared to the CMWD Effluent Limitations, the only common parameter is noted to be pH. The Effluent Limitations specify that the pH of the brine into the SMP must be between 6.0 and 9.0 and according to the projections, the brine from the third stage systems will be approximately 7.1, within the required range.

5. Electrical

5.1 Existing Electrical

The existing site power supply is fed from a Southern California Edison (SCE) 1000 KVA pad-mount transformer located on the site, to the east of the building, between the building and the road. The power supply to this site is 277/480 Volts, 3-phase, 4W, 60 Hertz.

The existing electrical loads comprise of:

- One (1) 125 hp Nanofiltration pressurization pump
- One (1) 40 hp Nanofiltration pressurization pump
- One (1) 175 hp RO pressurization pump
- Ancillary Loads (including panelboards, cleaning in place, compressed air, etc)
- Treated Water Pumps including two (2) 125 hp pumps, two (2) 150 hp pumps and one (1) 250 hp pump

The total existing load is approximately 920 kVA. This assumes connected load at 80 percent diversity. It is expected that the actual running load will be lower than this. The load will need to be confirmed during detailed design.

5.2 Proposed Electrical Improvements

The new process will include a third stage RO booster for each train. It is assumed that this third stage will be installed on two of the three existing trains initially. This will consist of:

- One (1) control panel for each skid, each feeding a 30 kW pressurization pump
- One (1) common antiscalant pump
- One (1) common acid skid
- A few small motor operated valves, water quality instrumentation, etc.

The total new load (with two trains fitted with a third stage) is expected to be less than 80 kVA. The total load to be added ultimately (with three trains) would be approximately 120 kVA. Equipment will be sized as follows:

- Transformer – Existing 1000 kVA is not expected to require upgrade for the initial phase, however SCE will need to be consulted during design as the transformer capacity will be close to maximum.
- UPS – Existing. Confirm size of UPS is adequate for the new control panels. Alternatively provide a local UPS in each new control panel, with 2 hours battery backup.
- Switchboard and MCC:
    - Existing 1600 Amp Switchboard and MCC is not expected to require an upgrade
    - Replace the existing 400 Amp circuit breaker in the existing MCC (which previously

supplied the EDR) with a 200 Amp circuit breaker. This will be of sufficient size for total ultimate load of (3) third Stage RO Pressurization Water Pumps.

- Existing 208Y/120V Panelboard and associated Transformer– Confirm adequate capacity to supply ultimate load of (3) third Stage RO Control Panels.
- 480V Panelboard – Provide new panelboard sized for the ultimate load of (3) third Stage RO Units.
- Conduit and Conductors:
  - Provide new conduit and conductors between MCC and new panelboard, sized for ultimate (3) third Stage RO Units.
  - Provide new conduit and conductors between new 480V, 3 phase, panelboard and the two initial third Stage RO pressurization pump VFDs.
  - Provide new conduit and conductors between existing 120V, single phase panelboard and the two initial third Stage RO control panels.
  - Provide conduit and conductors to provide power and control to the new chemical pumps.
  - Provide conduit between the control panels and the Main Plant Control Panel (CP-1) for data as described in the Control System section.

Note that there is an existing raceway installed on hangers for distribution of the electrical power and control around the perimeter of the process/plant room. Surface conduit is also mounted around the process/plant room and on the roof structural beams. It is proposed that the existing raceway be used where possible, with surface conduit or a parallel raceway installed if there is not adequate space. There should not be a requirement for any significant runs of underground conduit.

Figure 5-1. MCC Location

To illustrate the proposed improvements, Drawing E-2 Single Line Diagram was prepared and is provided in **Appendix A**.

6. Control System

6.1 Programmable Logic Controller (PLC)

The PLC for each control panel will be an Allen Bradley PLC. The local PLC will provide all controls for the associated third stage RO unit. The PLC and instrumentation in each control panel will be supplied via the site UPS or a local UPS with 2 hours battery backup.

The new PLCs shall communicate via Ethernet (copper) with the existing Allen Bradley Controllogix PLC in Control Panel CP-1, located in the electrical room.

6.2 SCADA and Local HMI

Each control panel shall have a local Human Machine Interface (HMI) Screen. These shall be Allen Bradley PanelView or similar and will provide local access to all control functions and monitoring for the individual third stage RO unit. These shall be developed according to the existing Agency SCADA screens and templates where possible.

A site-wide SCADA system will also be used to provide access to control and monitoring functions for each of the new third stage RO units. The SCADA system installed at the site is GE Proficy IFix 5.8 system with Win 911 dial-out alarms. The SCADA system has unlimited licenses which means no additional software licenses will be required to implement the new control and monitoring for the third stage RO units.

SCADA integration will be part of the contractor scope. The integrator shall develop all screens in consultation with the PHWA and based on existing screens and templates. The integrator shall install the screens at the site, with supervision from the PHWA. The SCADA screens will provide access to all the same control and monitoring functions as the local HMI.

The integrator shall also implement changes necessary to incorporate dial-out alarms on the Win 911 system as required.

6.3 Control Strategies

The conceptual process control approach is illustrated in Drawing I-3 Membrane System Process and Instrumentation Diagram (P&ID), and further described in the section.

1. An Operator will select an existing membrane system for operation. The Operator will be prompted to select a third stage system. The selection will open a motorized valve located upstream of the selected system's booster pump. Each third stage system will have the ability to operate from the brine of any of the existing systems. This is accomplished by combining the brine discharge piping from the existing RO/NF1/NF2. The number of third stage systems operating will depend on the number of existing systems in operation.
2. Currently the brine is discharged to atmosphere. Once combined into a single pipe a pressure sustaining valve will be installed on the combined pipe, prior to the combined pipe exiting the facility. The new valve will be utilized to maintain an upstream pipe pressure of approximately 50 psi. This sustained pressure will be critical to the operation of the third stage booster pumps. The

brine from each third stage system will be combined and connected to the existing brine pipeline, downstream of the pressure sustaining valve.

3. Each of the third stage system's local PLCs will monitor the systems related inputs/outputs and alarms and send this information to the plant SCADA.
4. If a third stage system is in an alarm state, it will default to the next available third stage. In the case that there is not a third stage system available or the flow rate is too high for the available systems, the pressure sustaining valve (noted in Item 2) will automatically bypass the system and send the concentrate from the existing RO/NF1/NF2 directly to waste. The third stage system(s) can also be manually bypassed if the Operator desires.
5. Permeate will be discharged into the combined permeate pipeline from the existing primary membrane systems. The connection will be made upstream of analyzers used for control of sodium hydroxide, sodium hypochlorite, ammonia and fluorosilicic acid. The new permeate stream will blend with the existing streams and the existing chemical systems will adjust dosing to maintain currently established parameters. No modifications to the controls of the existing chemical systems is anticipated.
6. Metering pumps will dose acid based on pH analyzer output. Each third stage system will include a dedicated metering pump with a single spare to be used amongst all systems. The chemical system will include inputs from the third stage system's booster pump indicating the start of operation. Dual pH analyzers will be located before and after dosing. If the pH differential drops to zero, indicating a pump failure or a line break, the chemical system will shut down along with the third stage system(s). In the event of a failure, the spare pump will be manually replaced and the system restarted. Due to the non-critical nature of the systems, a fully automated or a redundant pumping system is not provided.
7. Metering pumps will dose antiscalant based on water quality testing results and manual adjustments. Similar to the acid chemical system, each third stage system will include a dedicated metering pump with a single spare to be used amongst all systems. The new antiscalant system will operate independently from the existing antiscalant system. The new antiscalant chemical system will include a flow sensor to indicate failure of the pump, which will prompt a shutdown of the corresponding third stage.

7. Economic Analysis

An economic analysis was conducted which took into consideration capital, operational and maintenance costs for the new system(s), with the intent of establishing an estimated payback period for the proposed project.

To determine the payback period, an estimate of probable construction cost is required. Using the project design criteria established in Section 4 an engineer's estimate of probable construction cost was prepared. The estimates provided are prepared as a Class 4 estimate in accordance with Association of Cost Engineering International (ACEE) criteria. A Class 4 estimate is considered a concept study/feasibility estimate project detail up to 15 percent of full project definition.

The two alternatives are included in the economic analysis, consisting of (Option 1) one third stage RO system, or (Option 2) two third stage systems. The alternative with three third stage systems was eliminated due to the additional cost with minimal return, since all three RO/NF1/NF2 systems do not regularly operate simultaneously, as demonstrated in Section 3.2. Since at least two systems are typically in high demand (approximately 80 percent each), as illustrated in **Figure 3-1**, the two options are considered to represent the most viable alternatives. However, should the noted assumptions or constraints change in the future the third stage system option may be cost effective.

Table 7-1 and 7-2 detail the estimated capital cost to construct one or two third stage systems respectively.

Table 7-1
Engineer's Estimate of Probable Construction Cost for Option 1 - One Third Stage System

Description	Detail	Quantity	Unit Price	Capital Cost
Reverse Osmosis System [(a)]	200 GPM RO Six FRP pressure vessels 36, 400 sq. ft. RO membranes 316 SS Booster Pump with 30 kW motor and VFD 316L SS Cartridge Filter PLC and Control Panel with NEMA 4X enclosure with OIT and AB PLC One spare PLC Feed Quality Panel w/turbidity, conductivity, free chlorine, pH and temperature monitors	1	$185,000	$185,000
Chemical Injection Skid [(a)]	Acid skid and pH analyzer One diaphragm metering pump HDPE day tanks, 160 gallons for acid	1	$5,500	$5,500
Startup and Commissioning [(b)]	Per skid	1	$7,612	$7,600
Mobilization	Per skid	1	$5,000	$5,000
Site Piping Modifications	4" PVC pipe	150	$20/foot	$3,000
Electrical & Instrumentation	25 percent of RO System Cost			$46,250
	Construction Subtotal			$252,350

Contingency (25%)[c]	$63,000
Final Design[d]	$117,680
Construction Phase Services[d]	$59,740
Construction Management (10%)	$24,235
Project Total	$518,000

(a) Equipment cost from Biwater Inc. quote. (October 9, 2015)
(b) System start-up cost from H2O Engineering quote. (October 9,2015)
(c) Contingency may include additional modifications to the electrical system and SCADA improvements. Actual modifications will be determined during final design.
(d) Dollar amount from project contract. Construction management not included in contract.

Table 7-2
Engineer's Estimate of Probable Construction Cost of Option 2 - Two Third Stage Systems

Description	Detail	Quantity	Unit Price	Capital Cost
Reverse Osmosis System [a]	200 GPM RO Six FRP pressure vessels 36, 400 sq.ft. RO membranes 316 SS Booster Pump with 30 kW motor and VFD 316L SS Cartridge Filter PLC and Control Panel with NEMA 4X enclosure with OIT and AB PLC One spare PLC Feed Quality Panel w/turbidity, conductivity, free chlorine, pH and temperature monitors	2	$185,000	$370,000
Chemical Injection Skid [a]	Acid skid and pH analyzer Three diaphragm metering pumps HDPE day tanks, 160 gallons for acid	1	$5,500	$5,500
Startup and Commissioning [b]	Per skid	2	$7,600	$15,200
Mobilization	Per skid	2	$5,000	$10,000
Site Piping Modifications	4" PVC pipe	300	$20/foot	$6,000
Electrical & Instrumentation	25 percent of RO System Cost			$92,500
	Construction Subtotal			$499,200
	Contingency (25%)[c]			$125,000
	Final Design[d]			$117,680
	Construction Phase Services [d]			$59,740
	Construction Management (10%)			$50,000
	Project Total			$852,000

(a) Equipment cost from Biwater Inc. quote. (October 9, 2015)
(b) System start-up cost from H2O Engineering quote. (October 9,2015)
(c) Contingency may include additional modifications to the electrical system and SCADA improvements. Actual modifications will be determined during final design.
(d) Dollar amount from project contract. Construction management not included in contract.

As demonstrated by **Tables 7-1** and **7-2**, the cost for two systems is not double the cost of a single system. The savings are due to economy of scale, since engineering services, construction management, and startup and commissioning are expected to remain constant across both options.

To determine the payback period for the two alternatives, the operations and maintenance costs have been estimated and are presented below in **Table 7-3** and **7-4**.

Table 7-3
Engineer's Estimate of Probable O&M Cost of Option 1 – One Third Stage RO System

Description	Unit Cost	Unit	Quantity	Unit	Cost/AF	Unit
Membrane Replacement[(a)]	600	$/membrane	0.1	mem/AF	63.16	$/AF
Antiscalant[(b)]	1	$/lb	33.6	lb/AF	33.62	$/AF
pH Adjustment [(c)]	0.13	$/lb	320.2	lb/AF	41.62	$/AF
Operation and Maintenance	100	$/hr	0.9	hr/AF	91.23	$/AF
Electrical	0.08	$/kWh	750	kWh/AF	60	$/AF
				O&M Subtotal	289.63	$/AF
				Contingency (25 %)	72.41	$/AF
				O&M Total	362.03	$/AF

(a) Single stage RO with 6 housings and 6 membranes per housing is 36 membranes. Assume membranes replaced every 3 years @ $600/membrane. Membrane life may be shorter or longer depending on water quality, affecting the operating and maintenance costs. Accurate membrane life can only be determined by running a pilot system.
(b) Based on Alkema antiscalant projections: 10.5lbs/day of antiscalant and 100 lb/day of sulfuric acid.
(c) Based on the current average cost of sulfuric acid in the US.

Table 7-4
Engineer's Estimate of Probable O&M Cost of Option 2 - Two Third Stage Systems

Description	Unit Cost	Unit	Quantity/AF	Unit	Cost/AF	Unit
Membrane Replacement[(a)]	600	$/membrane	0.1	mem/AF	70.76	$/AF
Antiscalant[(b)]	1	$/lb	33.6	lb/AF	33.62	$/AF
pH Adjustment [(c)]	0.13	$/lb	320.2	lb/AF	41.62	$/AF
Operation and Maintenance	100	$/hr	0.9	hr/AF	91.23	$/AF
Electrical	0.08	$/kWh	750	kWh/AF	60	$/AF
				O&M Subtotal	297.23	$/AF
				Contingency (25%)	74.31	$/AF
				O&M Total	371.54	$/AF

(a) Single stage RO with 6 housings and 6 membranes per housing is 36 membranes. Assume membranes replaced every 3 years @ $600/membrane. Membrane life may be shorter or longer depending on water quality, affecting the operating and maintenance costs. Accurate membrane life can only be determined by running a pilot system.
(b) Based on antiscalant projections: 10.5lbs/day of antiscalant and 100 lb/day of sulfuric acid per third stage system.
(c) Based on the current average cost of sulfuric acid in the US.

This economic analysis compares the cost per acre foot for producing water using the third stage system(s) with purchasing the equivalent amount of imported water. The delta of these two water sources is then divided by the overall capital expenditure and the resulting value is the expected payback for the proposed project. **Table 7-5** presents the described payback analysis for the two options presented in this section.

Table 7-5
Payback Period Scenarios

	Option 1: One Third Stage System	**Option 2: Two Third Stage Systems**
Total Capital Cost	$518,000	$852,000
Total Operating Cost per AF	$362	$372
Annual Feed Flow (AF) [(a)]	285	483
Annual Permeate (AF) [(b)]	143	242
Cost of Imported Water ($/AF) [(c)]	$1,257	$1,257
Savings per AF	$895	$885
Total savings per year	$127,533	$213,839
Payback	4.1	4.0
Grant Potential [(d)]	$340	$340
Revised Payback with Grant Funding	3.0	2.9

(a) Annual feed flow for Option 1 is based on a 90 percent run time; with flexibility to utilize brine waste from any of the three primary systems, the only limitation for run time is the down time associated with membrane cleaning and skid maintenance which is assumed to be 10 percent. Option 2 is based on 80 percent run time for both skids, which is consistent with historical run time data for the RO and NF1 primary systems, as summarized in Section 3.
(b) Projected 50 percent system recovery.
(c) 2016 cost of imported water from CMWD as provided by PHWA.
(d) Dollar per acre foot grant potential from Grant Funding Analysis conducted by Kestrel. See Technical Memo in **Appendix D.**

Table 7-5 indicates that without grant funding the payback period of a single third stage system is 4.1 years and 4.0 years for two third stage systems. With grant funding, assuming $340/AF as noted in **Appendix D**, the payback period may be reduced down to 3.0 and 2.9 years, for one and two systems respectively.

The findings of the economic evaluation are based on several assumptions that are subject to change over time. As such the following should be considered in conjunction with the final payback values:

- If the plant production demand increases to where both systems are needed a larger percentage of the time, the payback period would ***decrease*** further.
- The key driving factor for the payback is the cost of third stage water versus imported water. Should the cost of imported water ***increase*** at a faster pace than the cost of labor, chemicals and energy associated with third stage operation, then the payback period would ***decrease*** further.
- This estimate does not take into account the cost to discharge into the SMP. As noted by PHWA staff, the agency does not incur a charge for discharging brine waste unless the water quality limits are violated. Based on projections using the limited data provided by PHWA, the brine from the third stage systems is expected to be within discharge limits and no additional cost will occur.
- With the installation of the third stage system(s), blending ratios will change due to the additional permeate produced, which may further reduce the current need for imported water. For purposes of this analysis, the offset was assumed to be one to one.
- Run times are based on monthly summaries as provided by PHWA, which indicated that both the RO system and NF1 operated approximately 80 percent of the time. If more detailed run time data can be provided, which would justify an increased run time for either system, then the payback period would be ***decreased***.

8. Project Schedule

This section presents the anticipated design, procurement, and construction schedule for the project. The total estimated construction period for the third stage RO system(s) is 25 weeks. The main schedule limitations are the PHWA land lease negotiations, fabrication of the RO system(s) with an estimated duration of 16 weeks, financing the project by the PHWA member agencies, and acquiring grant funding. The project schedule can be seen in **Appendix E**.

The land lease negotiations and financing by member agencies are not included in the schedule but, would be assumed to be resolved prior to construction beginning. The acquisition of grant funding is assumed to be complete prior to the issuance of the notice to proceed.

There is minimal downtime expected for the primary membrane systems during startup and construction of the third stage systems. As part of the system design, each of the primary systems will be able to bypass the third stage system(s) directly to the brine waste discharge, so this will be utilized during construction.

9. Drawings

Table 9-1 provides a summary of the drawings to be provided as part of the final design. The drawings noted in bold are provided in **Appendix A**.

Table 9-1
Anticipated Design Drawings

Sheet No.	Sheet Name	Description
1	**G-1**	**Title Sheet, Location Map, Vicinity Map, and Sheet Index**
2	**G-2**	**Legend, Abbreviations, and Pipe Schedule**
3	**G-3**	**Process Flow Schematic and Design Criteria**
4	S-1	Structural General Notes and Abbreviations
5	S-2	Structural Details
6	M-1	Pre-Treatment Plan
7	**M-2**	**Membrane System Plan**
8	M-3	Mechanical Details I
9	M-4	Mechanical Details II
10	M-5	Chemical System Modifications
11	E-1	Electrical Legend and Abbreviations
12	**E-2**	**Single Line Diagram and MCC Modifications**
13	E-3	Power and Signal Plan
14	E-4	Elementary Diagrams and Electrical Details
15	I-1	Instrumentation Legend
16	I-2	P&ID – Chemical System Modifications (Pre-Treatment)
17	**I-3**	**P&ID – Membrane System**
18	I-4	Instrumentation Details

Drawings in **Table 9-1** are from the August 21, 2015 contract. Following the Preliminary Design Review, modified drawings may be requested as follows:

- M-1 Pre-Treatment Plan to become Acid Injection System Plan
- M-5 Chemical System Modifications to become Antiscalant System Modifications
- I-2 P&ID – Chemical System Modifications (Pre-Treatment) to become P&ID – Acid System Modifications
- Add additional “I” sheet called P&ID – Antiscalant System Modifications

List of Appendices:

Appendix A – Conceptual Drawings

Appendix B – Antiscalant Projections

Appendix C – System Modeling

Appendix D – Grant Funding Technical Memo

Appendix E – Construction Schedule

Appendix A – Conceptual Drawings

PORT HUENEME WATER AGENCY
PORT HUENEME, CALIFORNIA

PLANS FOR

3RD STAGE REVERSE OSMOSIS PROJECT

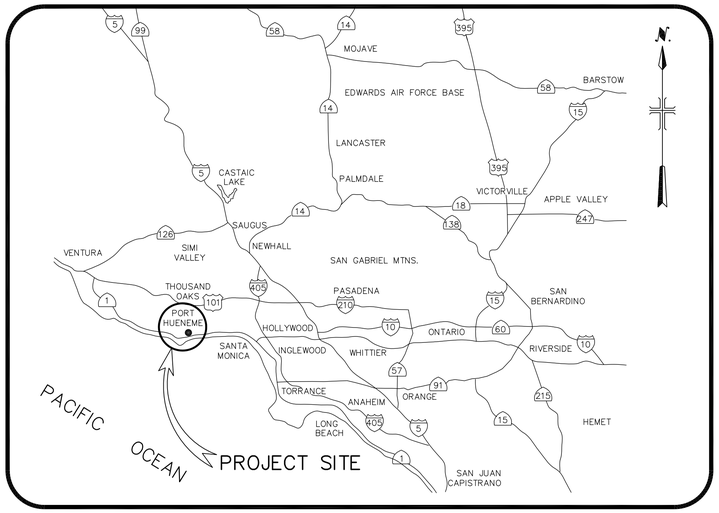

VICINITY MAP
NOT TO SCALE

SHEET INDEX

SHEET	DRAWING NO.	TITLE
	GENERAL	
1	G-1	TITLE SHEET, LOCATION MAP, VICINITY MAP, AND SHEET INDEX
2	G-2	LEGEND, ABBREVIATIONS, AND PIPE SCHEDULE
3	G-3	PROCESS FLOW SCHEMATIC AND DESIGN CRITERIA
	STRUCTURAL	
4	S-1	STRUCTURAL GENERAL NOTES AND ABBREVIATIONS
5	S-2	STRUCTURAL DETAILS
	MECHANICAL	
6	M-1	PRE-TREATMENT PLAN
7	M-2	MEMBRANE SYSTEM PLAN
8	M-3	MECHANICAL DETAILS I
9	M-4	MECHANICAL DETAILS II
10	M-5	CHEMICAL SYSTEM MODIFICATIONS
	ELECTRICAL	
11	E-1	ELECTRICAL LEGEND AND ABBREVIATIONS
12	E-2	SINGLE LINE DIAGRAM AND MCC MODIFICATIONS
13	E-3	POWER AND SIGNAL PLAN
14	E-4	ELEMENTARY DIAGRAMS AND ELECTRICAL DETAILS
	INSTRUMENTATION	
15	I-1	INSTRUMENTATION LEGEND
16	I-2	P&ID – CHEMICAL SYSTEM MODIFICATIONS (PRE-TREATMENT)
17	I-3	P&ID – MEMBRANE SYSTEM
18	I-4	INSTRUMENTATION DETAILS

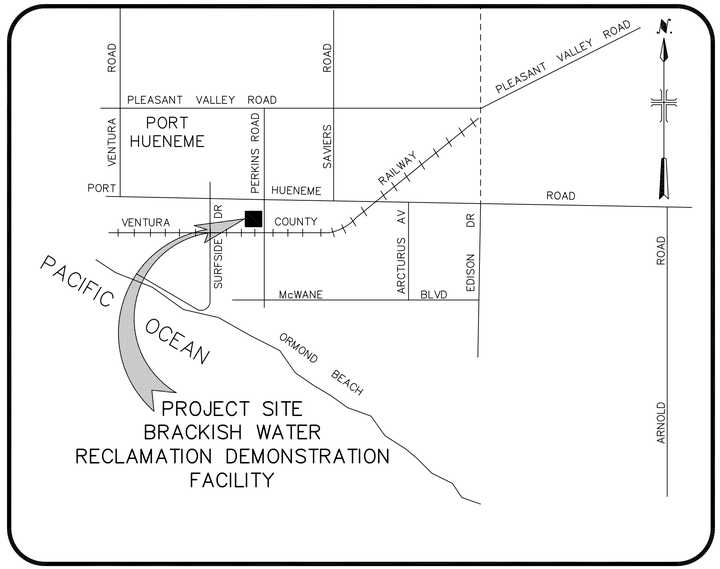

LOCATION MAP
NOT TO SCALE

PRELIMINARY DESIGN REPORT 11/09/15

G-1

KEH & ASSOCIATES, INC.
2901 North Ventura Road
Suite 180
Oxnard, CA 93036
(805) 981-1000

RYAN GALLAGHER 74805 12/31/15
ENGINEER RCE EXP LIC.DATE

REVISIONS

NO.	DESCRIPTION	DATE	APPR

Port Hueneme Water Agency

REVIEWED: KIT NELL, CITY ENGINEER DATE

APPROVED: CHRIS THIESSEN, DIRECTOR DATE

3RD STAGE R.O. PROJECT

TITLE SHEET, LOCATION MAP, VICINITY MAP, AND SHEET INDEX

DRAWN BY:
DATE: NOV 2015
SCALE: AS SHOWN
CASH CONTRACT NO. PHWA 01-15
SHT 1 OF 15 SHTS

C:\Users\Rock Nelson\Box Sync\Projects\PHWA\3rd Stage\0 (PHWA-01-15)\00 CAD\ALT DESIGN\01-3RD-PROJ_G-1.dwg Nov 07, 2015, 6:45am Rock Nelson

PIPING SYMBOLS

DESCRIPTION VALVES	SINGLE LINE	DOUBLE LINE
GLOBE		
PLUG		
CHECK		
SPECIAL		
BUTTERFLY		
WAFER–BUTTERFLY		
BALL		
DIAPHRAGM		
PRESSURE RELIEF		
HOSE BIBB/F.H.		
ANGLE		
PRESSURE REGULATOR		
ANTI–SIPHON		
BACKPRESSURE		
SOLENOID VALVE	S	S
ELECTRIC MOTOR OPERATOR (ON BUTTERFLY VALVE)	M	M
PNEUMATIC OPERATOR (ON BUTTERFLY VALVE)		
POST INDICATOR (PIV)		
BACKFLOW PREVENTER	BFP	

DESCRIPTION	SINGLE LINE	DOUBLE LINE
FLANGED PIPE CONNECTION		
BELL AND SPIGOT OR MECHANICAL JT. CONNECTION		
DRAIN		
FLOOR CLEANOUT		
PIPE CLEANOUT		
FLOOR DRAIN		
FLOW SWITCH	FS	
PRESSURE GAUGE & COCK		
PULSATION DAMPENER		
CALIBRATION CYLINDER		
EQUIPMENT		
PUMP		
ROTAMETER		
VENTURI METER		
PROPELLER METER		

FITTINGS & MISCELLANEOUS		
DIRECTION OF FLOW		
REDUCER		
UNION		
FLEXIBLE COUPLING		
FLANGED COUPLING ADAPTER		
STATIC MIXER		
FLEXIBLE CONNECTOR		
ELBOW		
TEE		
Y STRAINER & FLUSH VALVE		
CAP		
BLIND FLANGE		
INSULATED PIPE		

REFERENCE SYMBOLS

SECTION A / M–1 — SECTION DESIGNATION; SHEET DRAWN ON

DETAIL 1 / M–1 — DETAIL DESIGNATION; SHEET DRAWN ON

GENERAL LEGEND

- INSULATION IN SECTION
- EARTH IN SECTION
- CONCRETE IN SECTION
- STEEL IN SECTION
- WOOD IN SECTION
- GRATING
- CHECKERED PLATE
- PAVING
- FINISH GRADE
- WATER SURFACE
- HOSE RACK
- BORING LOG AND NUMBER
- DESIGNATES DOOR NO. 7
- EXISTING STRUCTURE (E)
- NEW STRUCTURE (N)
- DEMOLITION
- (N) CONTOUR ELEVATION LINE
- (E) CONTOUR ELEVATION LINE
- CENTERLINE
- PAVEMENT EDGE IN PLAN
- (N) STORM DRAIN INLET
- (N) STORM DRAIN MANHOLE

ABBREVIATIONS

AB	AGGREGATE BASE
A.C.	ASPHALT CEMENT
ADDIT.	ADDITIONAL
ADJ.	ADJUSTABLE
AGG	AGGREGATE
ALUM	ALUMINUM
APPRO.	APPROXIMATELY
ARCH	ARCHITECTURAL
ASPH	ASPHALT
AVG	AVERAGE
ARV	AIR RELEASE VALVE
BC	BEGIN CURVE
BF	BLIND FLANGE
BFV	BUTTERFLY VALVE
BLDG	BUILDING
BM	BEAM
BOT, BOTT	BOTTOM
BV	BALL VALVE
CC, C/C	CENTER TO CENTER
CL	CENTERLINE
CLR	CLEAR(ANCE)
CO	CLEANOUT
COL	COLUMN
CONC	CONCRETE
CONN	CONNECTION
CONST	CONSTRUCTION
CONT	CONTINU(ED), (OUS)
CPLG	COUPLING
DIA	DIAMETER
DIM	DIMENSION
DIP	DUCTILE IRON PIPE
DISCH	DISCHARGE
DN	DOWN
DWG(S)	DRAWING(S)
E	ELECTRICAL
EA	EACH
EC	END CURVE
ED	ELECTRODIALYSIS (REVERSAL)
EF	EACH FACE
EL., ELEV	ELEVATION
ELEC(T)	ELECTRIC(AL)
EMG	EMERGENCY
EQ	EQUAL
EQUIP	EQUIPMENT
EXH	EXHAUST
EXIST, (E)	EXISTING
EXP	EXPANSION
EW	EACH WAY
(F)	FUTURE
FAC	FACTORY
FC	FLEXIBLE COUPLING
FCA	FLANGE COUPLING ADAPTER
FCO	FLOOR CLEANOUT
FD	FLOOR DRAIN
FE	FIRE EXTINGUISHER
FF	FINISH FLOOR
FH	FIRE HYDRANT
FIN	FINISH(ED)
FL	FLOW LINE
FLR	FLOOR
FLG	FLANGE
FLEX	FLEXIBLE
FRP	FIBERGLASS REINFORCED PLASTIC
FT	FOOT
FTG	FOOTING
G	GAS
GA	GAUGE
GALV	GALVANIZED
GI	GALVANIZED IRON
GPD	GALLONS PER DAY
GPM	GALLONS PER MINUTE
GS	GALVANIZED STEEL
GYP (BD), GWB	GYPSUM (BOARD), GYPSUM WALLBOARD
HB	HOSE BIBB
HM	HOLLOW METAL
HORIZ, H	HORIZONTAL
H.P.	HIGH POINT
HP	HORSEPOWER
HR	HOUR
HT	HEIGHT
ID	INSIDE DIAMETER
IE	INVERT ELEVATION
IN	INCHES
INSUL	INSULATION
INV	INVERT
JB	JUNCTION BOX
JT	JOINT
L	LENGTH
LAB	LABORATORY
LG	LONG
LR	LONG RADIUS
MAX	MAXIMUM
MCC	MOTOR CONTROL CENTER
MECH	MECHANICAL
MET	METAL
MFR, MNFR	MANUFACTURER
MGD	MILLION GALLONS PER DAY
MH	MANHOLE
MIN	MINIMUM
MISC	MISCELLANEOUS
MNTD	MOUNTED
MPH	MILES PER HOUR
(N)	NEW
N/A	NOT APPLICABLE
NF	NANOFILTRATION
NFSS	NANOFILTRATION SYSTEM SUPPLIER
NGVD	NATIONAL GEODETIC VERTICAL DATUM
NIC	NOT IN CONTRACT
NO.	NUMBER
NTS	NOT TO SCALE
OC	ON CENTER
OD	OUTSIDE DIAMETER
OPNG(S)	OPENING(S)
P	PNEUMATIC
PG	PRESSURE GAUGE
PL	PLATE
P/L	PROPERTY LINE
PRES(S)	PRESSURE
PRV	PRESSURE RELEASE VALVE
PSF	POUNDS PER SQUARE FOOT
PSI	POUNDS PER SQUARE INCH
PT	POINT
R	RADIUS
REFRIG	REFRIGERATOR
REINF	REINFORCE(D), (MENT)
RESIL	RESILIANT
RM	ROOM
RO	REVERSE OSMOSIS
RR	RAILROAD
R/W	RIGHT OF WAY
S	SEWER
SD	STORM DRAIN
SDMH	STORM DRAIN MANHOLE
SF	SQUARE FOOT
SHT	SHEET
SPEC	SPECIFICATION(S)
SQ	SQUARE
SS	STAINLESS STEEL
STD	STANDARD
ST(L)	STEEL
STR(UCT)	STRUCTUR(E), (AL)
SV	SOLENOID VALVE
SYS	SYSTEM
T	TELEPHONE
T/	TOP
T&B	TOP AND BOTTOM
T/C, TOC, TC	TOP OF CONCRETE
TDH	TOTAL DYNAMIC HEAD
TEMP	TEMPERATURE
TH	THICKNESS
T/S, TOS	TOP OF STEEL
TYP	TYPICAL
T–_–P	TYPE_____PIPE
T–_–S	TYPE_____SUPPORT
V, VERT	VERTICAL
VTR	VENT TO ROOF
W	WATER
W/	WITH
WC	WATER CLOSET
WCO	WALL CLEANOUT
WH	WATER HEATER
W/O	WITHOUT
WV	WATER VALVE
#	POUND, NUMBER

PIPE SCHEDULE

LINE	SYSTEM	SIZE	SERVICE	MATL	PIPE TYPE	VALVE SYSTEM	NOTES
PROCESS							
BP	BYPASS	ALL	E	PVC	V–1	A	
BR/REJ	BRINE/REJECT WATER	ALL	E	SS	W–1	A	1
		ALL	E	PVC	V–1	A	
RW	RAW WATER	ALL	E	SS	W–1	A	2
		ALL	E	PVC	V–1	A	
SA	SAMPLE	ALL	E	PVC	V–1	A	
TW	TREATED WATER	ALL	E	PVC	V–1	A	
PM	PERMEATE	ALL	E	PVC	V–1	A	
CHEMICALS							
AS	ANTISCALANT	ALL	E	PVC	V–1	C	
CIPR/CIPS	CLEAN–IN–PLACE SOLUTION	ALL	E	CPVC	V–9	C	
HCL	HYDROCHLORIC ACID	ALL	E	CPVC	V–9	C	3
WATER							
NPW	NON–POTABLE WATER	ALL	E	PVC	V–1	A	
PW	POTABLE WATER	ALL	E	CU	T–1	E	
OTHER							
CRD	CORROSION RESISTANT	ALL	E	P	P		
DR	DRAIN	ALL	E	CISP	N–3		
CA	COMPRESSED AIR	ALL	E	GS	Y–1	I	

PIPE TYPE LEGEND

SERVICE

B BURIED
C CONCRETE ENCASED
E EXPOSED

SIZE

NOMINAL DIAMETER (o) IN INCHES

PIPE TYPE AND VALVE SYSTEM

SEE SPECIFICATIONS SECTION 15050 UNLESS OTHERWISE NOTED

MATERIAL

BS BLACK STEEL
CISP CAST IRON SOIL PIPE
CPVC CHLORINATED PVC
CU COPPER
DI DUCTILE IRON
GS GALVANIZED STEEL
P POLYPROPYLENE
PVC POLYVINYLCHLORIDE
PVDF POLYVINYLIDENE FLUORIDE
SS STAINLESS STEEL
WS WELDED STEEL

NOTES:

1. USE TYPE W–1 (316L) PIPE FROM THE MEMBRANE TO VALVE FCV–550. USE TYPE V–1 PIPE AFTER VALVES
2. USE TYPE W–1 (316L) PIPE FROM THE NF FEED PUMP TO MEMBRANES. USE TYPE V–1 BEFORE NF FEED PUMP.
3. PROVIDE DOUBLE CONTAINMENT FOR THESE PIPELINES.

PRELIMINARY DESIGN REPORT 11/09/15

G-2

KEH & ASSOCIATES, INC.
2901 North Ventura Road
Suite 180
Oxnard, CA 93036
(805) 981-1000

RYAN GALLAGHER 74805 12/31/15
ENGINEER RCE EXP LIC.DATE

REVISIONS

NO.	DESCRIPTION	DATE	APPR

Port Hueneme Water Agency

REVIEWED: KIT NELL, CITY ENGINEER — DATE

APPROVED: CHRIS THIESSEN, DIRECTOR — DATE

3RD STAGE R.O. PROJECT

LEGEND, ABBREVIATIONS, AND PIPE SCHEDULE

DRAWN BY: JRG
DATE: NOV 2015
SCALE: AS SHOWN
CASH CONTRACT NO. PHWA 01–15
SHT 2 OF 15 SHTS

C:\Users\Rock Nelson\Box Sync\Projects\PHWA\3rd Stage\0 (PHWA-01-15)\900 CAD\ALT DESIGN\02-3RO-PROJ_G-2.dwg Nov 07, 2015, 6:39pm Rock Nelson

2 X 200 GPM RO SKIDS

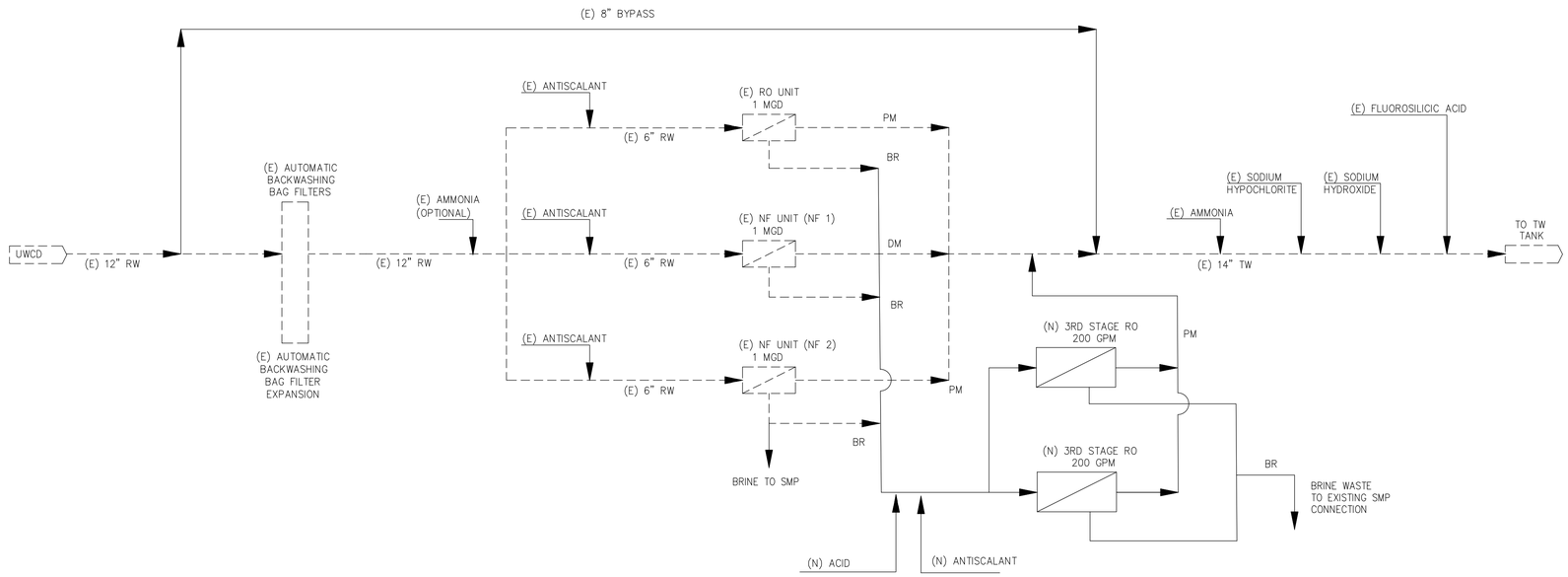

DESIGN CRITERIA

PLANT FLOW RATES	UNIT	EXISTING
Raw Water (Min/Max)	MGD	3.4/5.4
Treated Water (Min/Max)	MGD	2.8/4.5
Bypass Water (Min/Max)	gpm	430/800

SOURCE WATER CHARACTERISTICS	UNIT	EXISTING
Turbidity	NTU	0.07
Alkalinity (as CaCO3)	mg/L	213
pH	Units	7.40
Design Salinity (TDS)	mg/L	1,045
Design Hardness (as CaCO3)	mg/L	582

PERMEATE WATER CHARACTERISTICS	UNIT	REQUIREMENT
Turbidity	NTU	<0.01
Design Salinity (TDS)	mg/L	75
Design Hardness (as CaCO3)	mg/L	20

3RD STAGE RO SYSTEM	UNIT	REQUIRMENT
RO Process Trains	number	2
Average RO Permeate	gpm	
Average RO Feed Water	gpm	
Average RO Brine Flow	gpm	
Design Flux Rate	gfd	
Design Recovery	%	
Membrane Array	--	
First Stage Vessels	number	
RO Membrane Material	--	
RO Membrane Element Diameter	inches	

ANTISCALANT (Pre-Treatment)	UNIT	EXISTING	REQUIREMENT
Dosage (Avg/Max)	mg/l	0.2/0.5	
Usage (Avg/Max)	ppd	1.6/4.2	
Metering Pumps	number	1	
Capacity (Min/Max)	gph	0.0027/0.054	

LEGEND

- – – – Existing
- ——— Proposed
- RO Reverse Osmosis
- RW Raw Water
- PM Permeate
- BR Brine
- SMP Salinity Management Pipeline

PRELIMINARY DESIGN REPORT 11/09/15

G-3

KEH & ASSOCIATES, INC.
2901 North Ventura Road
Suite 180
Oxnard, CA 93036
(805) 981-1000

RYAN GALLAGHER 74805 12/31/15
ENGINEER RCE EXP LIC.DATE

REVISIONS

NO.	DESCRIPTION	DATE	APPR

Port Hueneme Water Agency

REVIEWED: KIT NELL, CITY ENGINEER — DATE

APPROVED: CHRIS THIESSEN, DIRECTOR — DATE

3RD STAGE R.O. PROJECT

PLANT FLOW SCHEMATIC WITH ALTERNATIVE DESIGN CRITERIA

DRAWN BY:
DATE: NOV 2015
SCALE: AS SHOWN
CASH CONTRACT NO. PHWA 01-15
SHT 3 OF 15 SHTS

C:\Users\Rock Nelson\Box Sync\Projects\PHWA\3rd StageRO (PHWA-01-15)\900 CAD\ALT DESIGN\03-3RD-PROJ_C-3.dwg Nov 07, 2015, 6:37am Rock Nelson

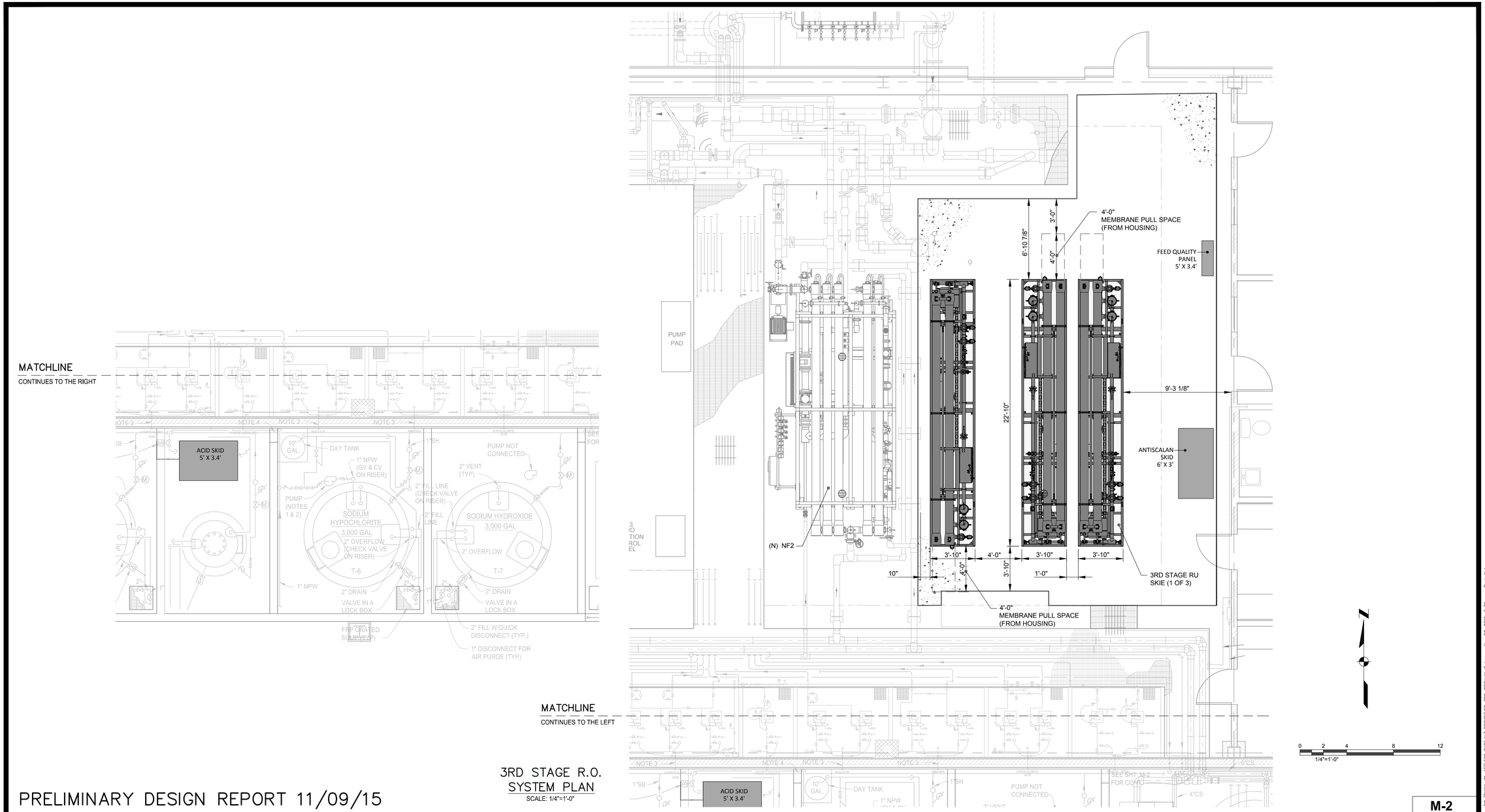

3RD STAGE R.O. SYSTEM PLAN
SCALE: 1/4"=1'-0"

PRELIMINARY DESIGN REPORT 11/09/15

M-2

KEH & ASSOCIATES, INC.
2901 North Ventura Road
Suite 180
Oxnard, CA 93036
(805) 981-1000

RYAN GALLAGHER 74805 12/31/15
ENGINEER RCE EXP LIC.DATE

REVISIONS			
NO.	DESCRIPTION	DATE	APPR

Port Hueneme Water Agency

REVIEWED: KIT NELL, CITY ENGINEER — DATE

APPROVED: CHRIS THIESSEN, DIRECTOR — DATE

3RD STAGE R.O. PROJECT

PRELIMINARY 3RD STAGE R.O. SYSTEM PLAN

DRAWN BY:
DATE: NOV 2015
SCALE: AS SHOWN
CASH CONTRACT NO. PHWA 01-15
SHT 5 OF 15 SHTS

C:\Users\Rock Nelson\Box Sync\Projects\PHWA\3rd Stage RO (PHWA-01-15)\900 CAD\ALT DESIGN\07-3RD-PROJ_M-2.dwg Nov 07, 2015, 6:38am Rock Nelson

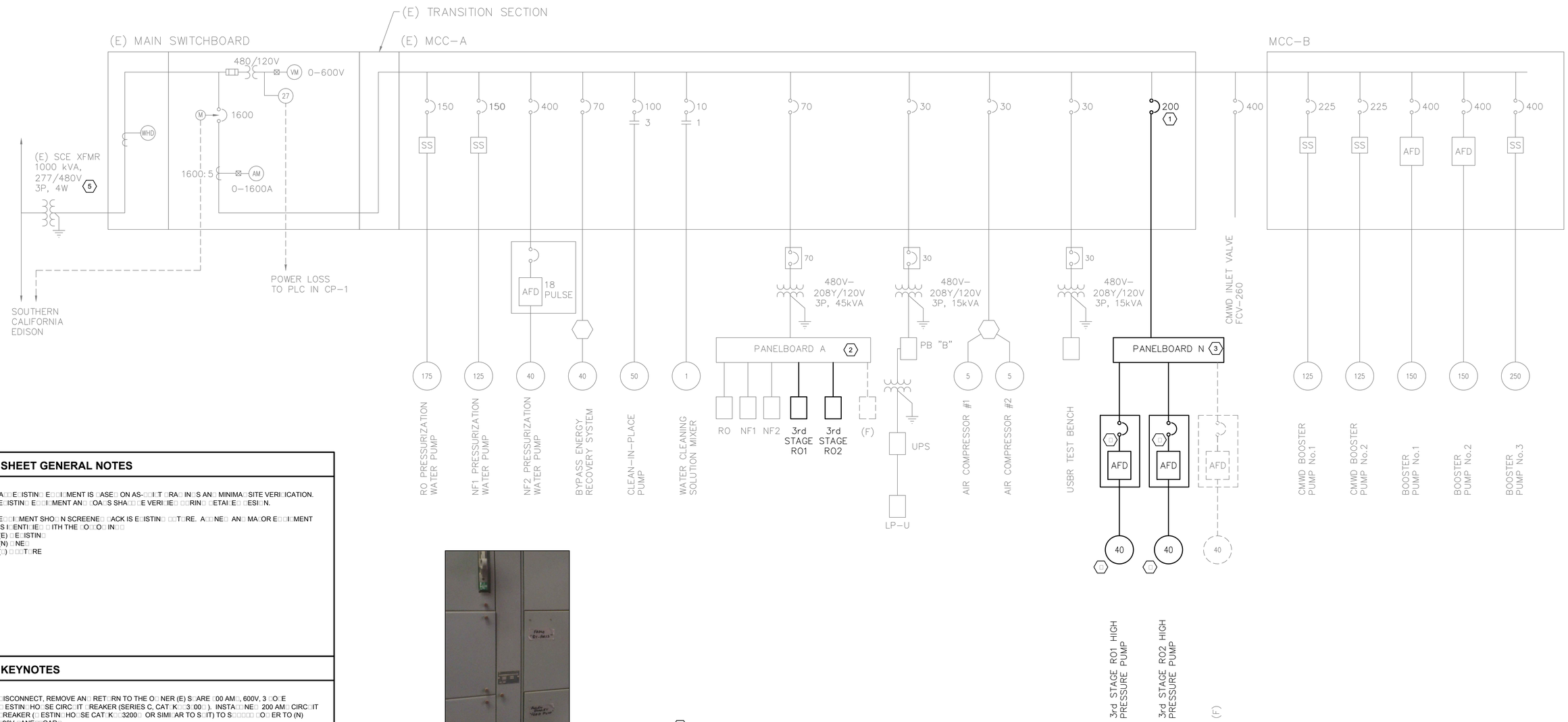

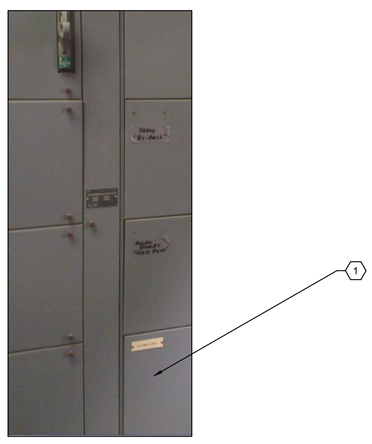

SHEET GENERAL NOTES

1. A□□ E□ISTIN□ E□□I□MENT IS □ASE□ ON AS-□□I□T □RA□ IN□S AN□ MINIMA□SITE VERI□ICATION. E□ISTIN□ E□□I□MENT AN□ □OA□S SHA□□E VERI□IE□ □□RIN□ □ETAI□E□ □ESI□N.

2. E□□I□MENT SHO□N SCREENE□ □ACK IS E□ISTIN□ □□T□RE. A□□NE□ AN□ MA□OR E□□I□MENT IS I□ENTI□IE□ □ ITH THE □O□O□ IN□□
(E) □E□ISTIN□
(N) □NE□
(□) □□□T□RE

KEYNOTES

1. □ISCONNECT, REMOVE AN□ RET□RN TO THE O□ NER (E) S□ARE □00 AM□, 600V, 3 □O□E □ ESTIN□ HO□SE CIRC□IT □REAKER (SERIES C, CAT□K□ 3□00□). INSTA□□NE□ 200 AM□ CIRC□IT □REAKER (□ ESTIN□HO□SE CAT□K□□3200□ OR SIMI□AR TO S□IT) TO S□□□□□ □O□ ER TO (N) □80V □ANE□□OAR□□.

2. □ROVI□E (N) CIRC□ITS TO □EE□ (N) CONTRO□□□ANE□S □OR THIR□ STA□E RO. CONTRO□ □ANE□S □I□□HAVE □OCA□□□S □O□ ER S□□□□□. □ ITH MINIM□M 2 HO□RS □ATTER□□ACK□□. A□TERNATIVE□□ □ROVI□E □O□ ER □ROM (E) □□ □ISTRI□□TION □ANE□. ENS□RE A□E□□ATE S□ACE IN □ANE□ TO S□□□□ □□T□RE CONTRO□□□ANE□ AS SHO□N.

3. □ROVI□E (N) 250AM□, □80V, 3□, □□ , □ISTRI□□TION □ANE□ON □ A□□O□ □ROCESS ROOM. THIS SHA□□HAVE CIRC□ITS □OR (N) THIR□ STA□E RO □RESS□RI□ATION □□M□S AN□ S□ARE S□ACE □OR (□) □□M□.

4. A□□□STA□□E □RE□□ENC□ □RIVE (A□□) AN□ □RESS□RI□ATION □□M□ □OR THIR□ STA□E RO TO □E S□□□□IE□ AS □ART O□ THE RO S□STEM □ACKA□E.

5. CON□IRM MA□IM□M □EMAN□ AN□ SI□E O□ TRANS□ORMER □ ITH SCE □□RIN□ □ETAI□E□ □ESI□N.

E-2

GHD
□H□ In□
3831 North □ree□a□□□d Suite 220,
Sa□ra□ento CA 9583□□□SA
T 1 916 3□2 6606 F 1 916 3□2 6616
W □□□.□hd.□o□

REVISIONS			
NO.	DESCRIPTION	DATE	APPR

Port Hueneme Water Agency

REVIEWED: KIT NELL, CITY ENGINEER — DATE

APPROVED: CHRIS THIESSEN, DIRECTOR — DATE

3RD STAGE R.O. PROJECT

SINGLE LINE DIAGRAM & MCC MODIFICATIONS

DRAWN BY: RGM
DATE: OCT. 2015
SCALE: N.T.S
CASH CONTRACT NO. PHWA 01–15
SHT – OF – SHTS

N:\US\Irvine\Projects\111\11109162\CADD\Drawings\Sheets\E-2.dwg

USERNAME: rmackenzie Thu 29 Oct 2015 10:36am

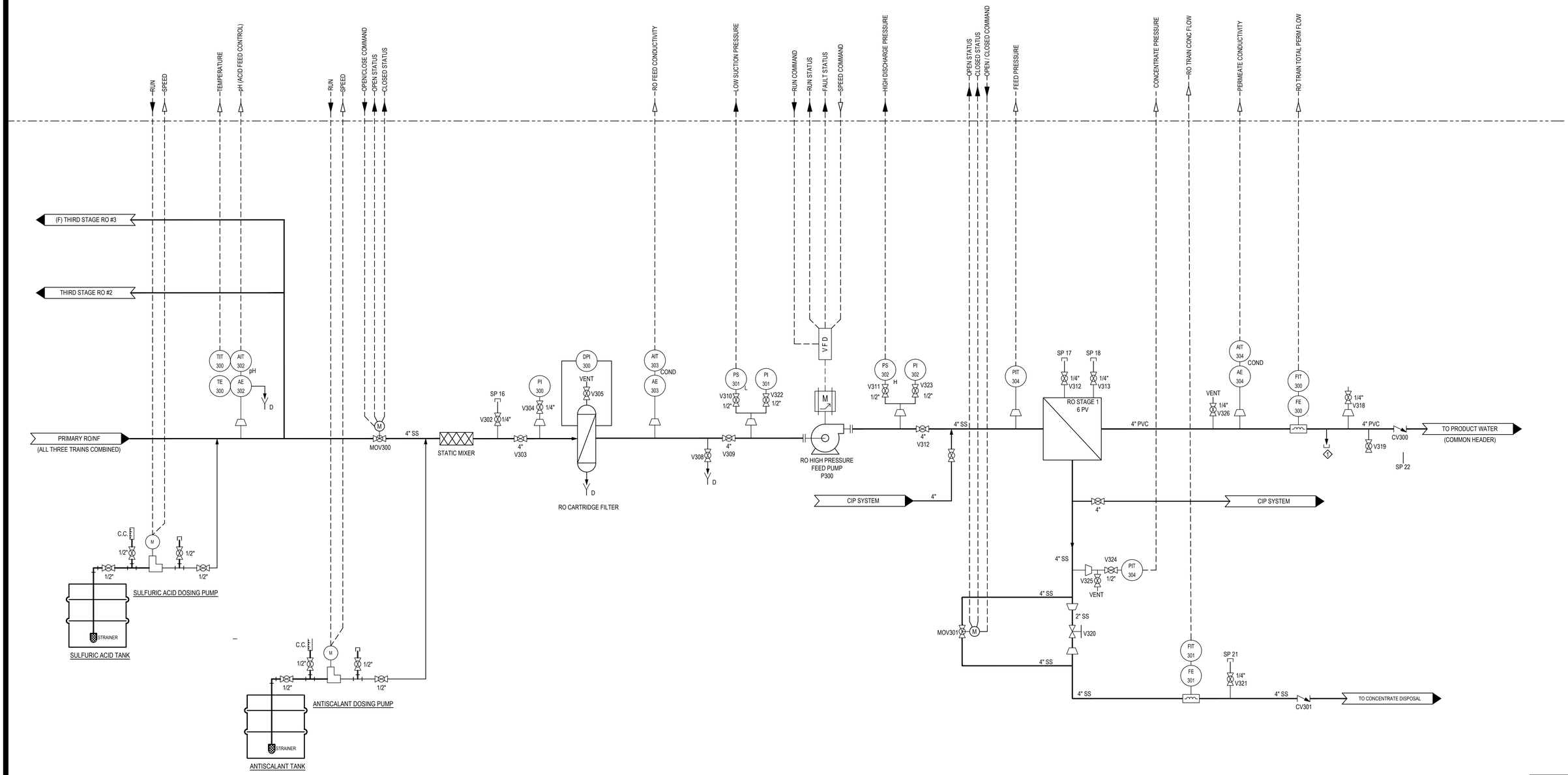

I-3

GHD

□H□ In□
3831 North □ree□a□□□d Suite 220,
Sa□ra□ento CA 9583□□SA
T 1 916 3□2 6606 F 1 916 3□2 6616
W □□□.□hd.□o□

REVISIONS			
NO.	DESCRIPTION	DATE	APPR

Port Hueneme Water Agency

REVIEWED:
KIT NELL, CITY ENGINEER — DATE

APPROVED:
CHRIS THIESSEN, DIRECTOR — DATE

3RD STAGE R.O. PROJECT

P&ID
MEMBRANE SYSTEM

DRAWN BY: RGM
DATE: OCT. 2015
SCALE: N.T.S
CASH CONTRACT NO. PHWA 01-15
SHT - OF - SHTS

N:\US\Irvine\Projects\111\11109162\CADD\Drawings\Sheets\I-3.dwg

USERNAME: rmackenzie Thu 29 Oct 2015 10:35am

Appendix B – Antiscalant Projections

Projection by:	**Mark Donovan**
Client name:	PHWA
Project name:	3rd Stage RO
Location:	United States / California / Irvine

Alkema Proton | 2.0.11
(release date: Oct 25, 2015)

	Unit	Overall
Recovery:	%	50.000
Temperature:	°C	15.000
Total permeate:	gal/min	100.000
Average Flux:	gfd	10.000
Flow Factor:		0.750
Feed Pressure:	psi	10.000
Total Δ P Elements:	psi	10.349
Brine Pressure:	psi	-0.349

Cations	Raw water (mg/L)	Balanced Feed (mg/L)	Reject (mg/L)	Permeate (mg/L)
Ca^{2+}	710.000	710.000	1418.341	1.659
Mg^{2+}	266.000	266.000	531.378	0.622
Ba^{2+}	0.050	0.050	0.100	0.000
Sr^{2+}	5.420	5.420	10.827	0.013
Na^{+}	562.183	562.183	1110.967	13.400
K^{+}	14.650	14.650	29.266	0.034
Fe^{2+}	0.000	0.000	0.000	0.000
Ferric(Fe^{3+})	0.000	0.000	0.000	0.000
Al^{3+}	0.000	0.000	0.000	0.000
Mn^{2+}	0.000	0.000	0.000	0.000
Total Ammonia(as NH4-N)	0.000	0.000	0.000	0.000

Anions	Raw water (mg/L)	Balanced Feed (mg/L)	Reject (mg/L)	Permeate (mg/L)
HCO_3^- Alk($CaCO_3$)	971.700	941.144	1848.707	9.873
CO_3^{2-} Alk($CaCO_3$)	0.000	16.126	80.632	0.001
Total Alk ($CaCO_3$)	971.700	957.270	1929.339	9.874
Ortho-$PO4^3$	0.000	0.000	0.000	0.000
SO_4^{2-}	2441.000	2481.079	4956.361	5.797
F^-	2.720	2.720	5.412	0.028
Cl^-	275.000	275.000	546.794	3.206
SiO_2	119.280	119.280	237.170	1.390
Nitrate (NO_3^--N)	52.000	52.000	103.454	0.546
Nitrite (NO_2^--N)	0.000	0.000	0.000	0.000
Total Sulfides (as S^2)	0.000	0.000	0.000	0.000
B	0.000	0.000	0.000	0.000
AS (III)	0.000	0.000	0.000	0.000
AS (V)	0.000	0.000	0.000	0.000
TDS:	5792.090	5804.800	11342.860	267.310
pH:	7.890	7.510	7.730	5.790
Flow:	gal/min	200.000	100.000	100.000

Summary	Product:	Dosage:
Adjusted chemical with:	H_2SO_4	44.000 mg/L
Recommended product:	AWC A-102 Ultra	2.659 mg/L

American Water Chemicals, DBA Alkema Solutions, Inc does not assume any obligation or liability for results obtained or damages incurred from the application of this information.

Projection by:	**Mark Donovan**
Client name:	PHWA
Project name:	3rd Stage RO
Location:	United States / California / Irvine

Alkema Proton | 2.0.11
(release date: Oct 25, 2015)

	Unit	Stage 1
Total Elements:		36
Total Vessels:		6
Elements / Vessels:		6
Req'd P/Stage:	psi	194.132
Feed P:	psi	10.000
Permeate Throttle/BackP:	psi	10.000
Boost P:	psi	0.000
Concentrate P:	psi	0.000

Stages output

	Membrane Model:	Permeate Flow: gal/min	Average Flux: gfd	Recovery: %	β	Feed Flow / PV: gal/min	Concentrate Flow / PV: gal/min	Δ P: psi	Osmotic P: psi	Net Driving P: psi
Stage1		100.000	10.000	50.000	1.117	33.333	16.667	10.349	56.470	139.809
1	BW30FR-400/34	18.048	10.829	9.024	1.095	33.333	30.325	2.538	41.463	151.400
2	BW30FR-400/34	17.500	10.500	9.618	1.102	30.325	27.409	2.171	43.706	146.802
3	BW30FR-400/34	16.959	10.175	10.312	1.110	27.409	24.582	1.836	46.246	142.258
4	BW30FR-400/34	16.411	9.847	11.127	1.120	24.582	21.847	1.532	49.153	137.668
5	BW30FR-400/34	15.844	9.506	12.087	1.131	21.847	19.206	1.258	52.519	132.907
6	BW30FR-400/34	15.237	9.142	13.223	1.145	19.206	16.667	1.014	56.470	127.820

Summary Scale – Precipitation Potentials (mg/L)

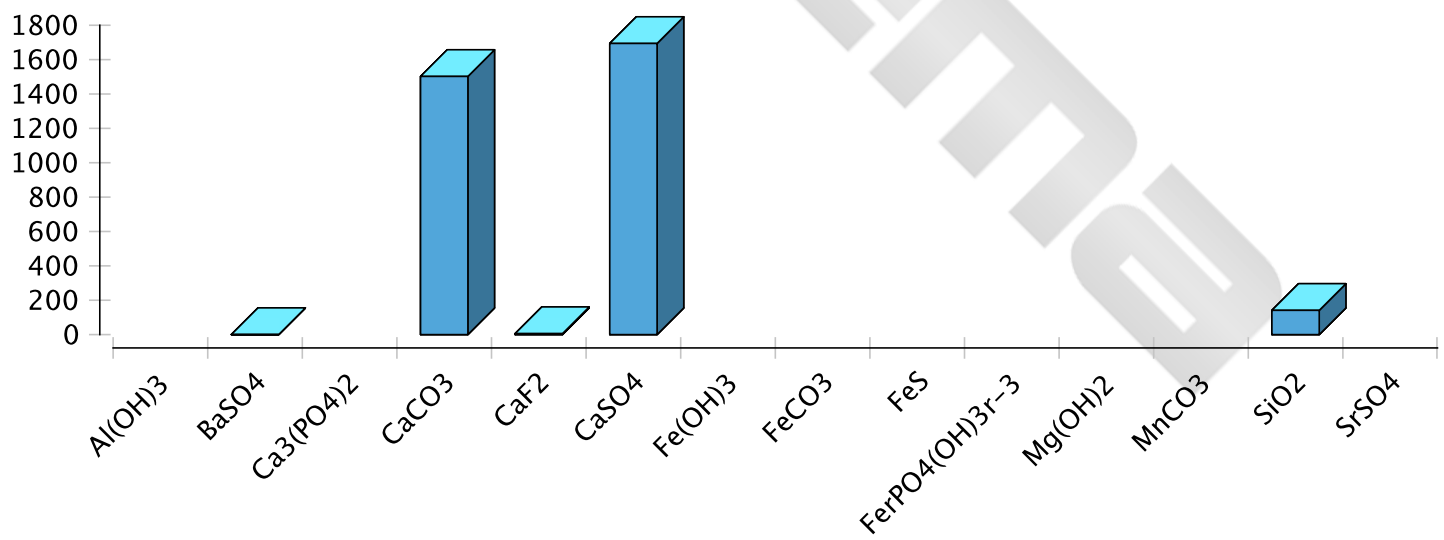

Summary Scale - Precipitation Potentials (mg/L)

$Al(OH)_3$	$BaSO_4$	$Ca_3(PO_4)_2$	$CaCO_3$	CaF_2	$CaSO_4$	$Fe(OH)_3$	$FeCO_3$	FeS	$FerPO_4(OH)_{3r-3}$	$Mg(OH)_2$	$MnCO_3$	SiO_2	$SrSO_4$
0	0.162	0	1502.237	5.784	1694.121	0	0	0	0	0	0	141.149	0

American Water Chemicals, DBA Alkema Solutions, Inc does not assume any obligation or liability for results obtained or damages incurred from the application of this information.

Projection by:	**Mark Donovan**
Client name:	PHWA
Project name:	3rd Stage RO
Location:	United States / California / Irvine

Alkema Proton | 2.0.11
(release date: Oct 25, 2015)

Summary Scale – X Saturation

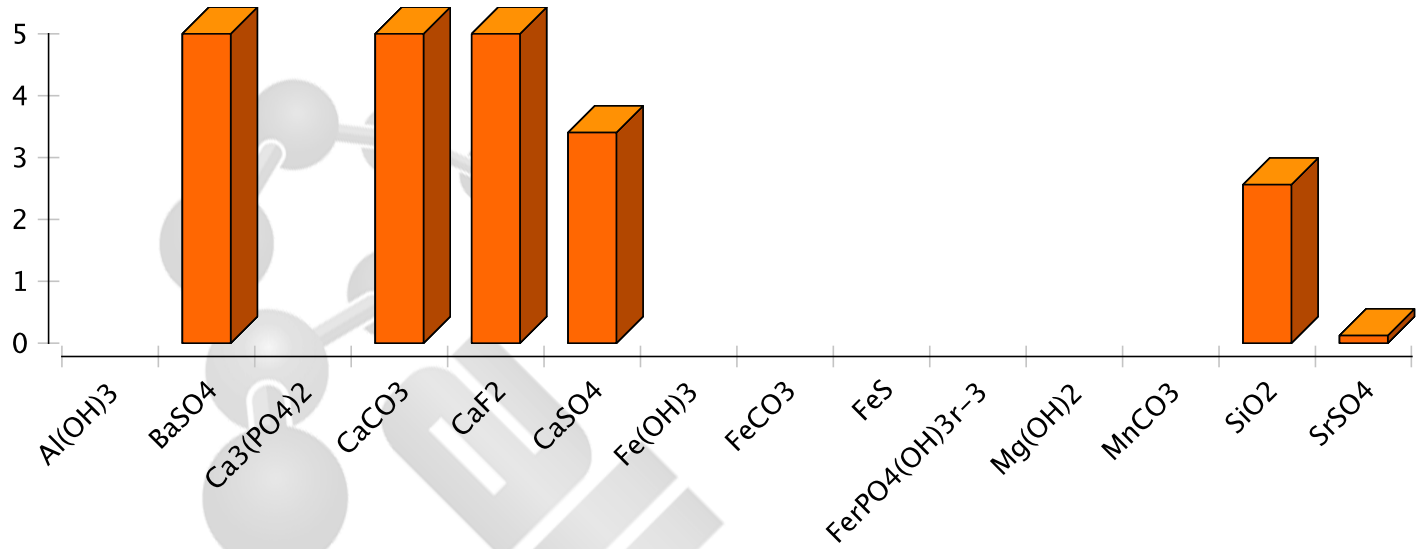

Summary Scale - X Saturation													
$Al(OH)_3$	$BaSO_4$	$Ca_3(PO_4)_2$	$CaCO_3$	CaF_2	$CaSO_4$	$Fe(OH)_3$	$FeCO_3$	FeS	$FerPO_4(OH)_{3r-3}$	$Mg(OH)_2$	$MnCO_3$	SiO_2	$SrSO_4$
0	21.403	0	661.514	22.47	3.404	0	0	0	0	0	0	2.562	0.123

Carbonate Scales	Precipitation Potential	X Saturation	Saturation Index
$CaCO_3$	1502.237	661.514	2.821
$MgCO_3$	0.000	63.968	1.806
$SrCO_3$	16.581	11.820	1.073
$BaCO_3$	0.000	0.014	-1.842
$FeCO_3$	0.000	0.000	0.000
$MnCO_3$	0.000	0.000	0.000

Phosphate Scales	Precipitation Potential	X Saturation	Saturation Index
$Ca_3(PO_4)_2$	0.000	0.000	0.000
$Mg_3(PO_4)_2$	0.000	0.000	0.000
$Sr_3(PO_4)_2$	0.000	0.000	0.000
$Ba_3(PO_4)_2$	0.000	0.000	0.000
$FeHPO_4$	0.000	0.000	0.000
$Fe_3(PO_4)_2$	0.000	0.000	0.000
$Mn_3(PO_4)_2$	0.000	0.000	0.000
$Fe_2Mg_{0.5}PO_4(OH)_4$	0.000	0.000	0.000
$Fe_2Ca_{0.5}PO_4(OH)_4$	0.000	0.000	0.000
$FerPO_4(OH)_{3r-3}$	0.000	0.000	0.000
$AlrPO_4(OH)_{3r-3}$	0.000	0.000	0.000
$AlPO_4$	0.000	0.000	0.000
$MgNH_4PO_4.6H_2O$	0.000	0.000	0.000

Sulfate Scales	Precipitation Potential	X Saturation	Saturation Index
$CaSO_4$	1694.121	3.404	0.532
$SrSO_4$	0.000	0.123	-0.888
$BaSO_4$	0.162	21.403	1.330

American Water Chemicals, DBA Alkema Solutions, Inc does not assume any obligation or liability for results obtained or damages incurred from the application of this information.

Fluoride Scales	Precipitation Potential	X Saturation	Saturation Index
CaF_2	5.784	22.470	1.352
MgF_2	0.000	0.982	-0.008
SrF_2	0.000	0.000	-5.052
BaF_2	0.000	0.000	-9.030
FeF_2	0.000	0.000	0.000

Metal Hydroxide and Oxide Scales	Precipitation Potential	X Saturation	Saturation Index
$Mg(OH)_2$	0.000	0.000	-4.399
$Fe(OH)_2$	0.000	0.000	0.000
$Mn(OH)_2$	0.000	0.000	0.000
$Fe(OH)_3$	0.000	0.000	0.000
MnO_2	0.000	0.000	0.000
$Al(OH)_3$	0.000	0.000	0.000
$Ca(OH)_2$	0.000	0.000	-18.144

Sulfide Scales	Precipitation Potential	X Saturation	Saturation Index
FeS	0.000	0.000	0.000
MnS	0.000	0.000	0.000

Silicate Scales	Precipitation Potential	X Saturation	Saturation Index
$Na(AlSi_2)x)OHy$	0.000	0.000	0.000
$Ca(AlSi_2)x)OHy$	0.000	0.000	0.000
$Ca(Al_2Si_2)x)OHy$	0.000	0.000	0.000
$Na(FeSi_2)x)OHy$	0.000	0.000	0.000
$CaSiO_3.H_2O$	0.000	0.000	-5.869
$MgSiO_3.H_2O$	0.080	8.895	0.875
$Mg_3Si_2O_5(OH)_4$	0.000	1.355	0.132
Na_2F_6Si	0.000	0.000	-41.675
SiO_2	141.149	2.562	0.409

General Warnings	
$CaCO_3$	Saturation is 661.51 X; [Saturation Index is 2.82]
$MgCO_3$	Saturation is 63.97 X; [Saturation Index is 1.81]
$SrCO_3$	Saturation is 11.82 X; [Saturation Index is 1.07]
$CaSO_4$	Saturation is 3.40 X; [Saturation Index is 0.53]
$BaSO_4$	Saturation is 21.40 X; [Saturation Index is 1.33]
CaF_2	Saturation is 22.47 X; [Saturation Index is 1.35]
$MgSiO_3.H_2O$	Saturation is 8.89 X; [Saturation Index is 0.87]
$Mg_3Si_2O_5(OH)_4$	Saturation is 1.36 X; [Saturation Index is 0.13]
SiO_2	Saturation is 2.56 X; [Saturation Index is 0.41]

American Water Chemicals, DBA Alkema Solutions, Inc does not assume any obligation or liability for results obtained or damages incurred from the application of this information.

Projection by:	**Mark Donovan**
Client name:	PHWA
Project name:	3rd Stage RO
Location:	United States / California / Irvine

Critical Indices	
LSI	2.446
SPI	2.032
Stiff&Davis Index	1.923
CaSO4 X Saturation	3.404
BaSO4 X Saturation	21.403
Malki Kinetics Index (MKI)	0.946
Malki Ca2(PO4)2 SI (MPI)	0.000
Malki Si Kinetics Index (MSI)	10.090
Antiscalant Precipitation Index	8.215
Ferric Hydroxide Fe(OH)3 Index	0.000
Ferric Hydroxyphosphate FerPO4 Index	0.000
Sodium Ferrosilicate Na(FeSi2)x)OHy Index	0.000
Calcium Aluminosilicate Ca(Al2Si2)x)OHy Index	0.000
Magnesium Hydroxide Mg(OH)2 Index	-4.399

Chemical dosing:	**AWC A-102 Ultra**	**H_2SO_4**
Dosage:	2.659 mg/L	44.000 mg/L
% Concentration:	N/A	93.000%
Dosing Pump:	1.830 ml/min	33.103 ml/min
Hours of Operation/Day:	24 hour(s)	24 hour(s)
Consumption per:		
Day	2.899 kg	47.969 kg
Week	20.295 kg	335.781 kg
4 Weeks	81.180 kg	1343.124 kg
Year	1058.236 kg	17508.581 kg
5 Years	5291.180 kg	87542.906 kg

Warnings	
Malki Si Kinetics Index (MSI)	Silica scaling may occur and require cleaning after 6 - 9 months of operation. Please consider reducing recovery

DISCLAIMER: NO WARRANTY, EXPRESSED OR IMPLIED, AND NO WARRANTY OF MERCHANTABILITY OR FITNESS FOR A PARTICULAR PURPOSE, IS GIVEN. American Water Chemicals, DBA Alkema Solutions, Inc does not assume any obligation or liability for results obtained or damages incurred from the application of this information. Because use conditions and applicable laws may differ from one location to another and may change with time, customer is responsible for determining whether products are appropriate for customer's use. American Water Chemicals, DBA Alkema Solutions assumes no liability, if, as a result of customer's use of the Proton membrane aqueous chemistry calculator, the customer should be sued for alleged infringement of any patent not owned or controlled by American Water Chemicals, DBA Alkema Solutions, Inc.

American Water Chemicals, DBA Alkema Solutions, Inc does not assume any obligation or liability for results obtained or damages incurred from the application of this information.

Appendix C – System Modeling

Reverse Osmosis System Analysis for FILMTEC™ Membranes ROSA 9.1 ConfigDB u399339_282
Project: PHWA PDR Case: 1
, GHD 10/23/2015

Project Information:

Case-specific:

System Details

Feed Flow to Stage 1	200.00 gpm	Pass 1 Permeate Flow	100.00 gpm	Osmotic Pressure:	
Raw Water Flow to System	200.00 gpm	Pass 1 Recovery	50.00 %	Feed	28.62 psig
Feed Pressure	181.84 psig	Feed Temperature	15.0 C	Concentrate	54.12 psig
Flow Factor	0.85	Feed TDS	5588.29 mg/l	Average	41.37 psig
Chem. Dose (100% H2SO4)	141.95 mg/l	Number of Elements	36	Average NDP	131.55 psig
Total Active Area	14400.00 ft²	Average Pass 1 Flux	10.00 gfd	Power	19.78 kW
Water Classification: Well Water SDI < 3				Specific Energy	3.30 kWh/kgal

Stage	Element	#PV	#Ele	Feed Flow (gpm)	Feed Press (psig)	Recirc Flow (gpm)	Conc Flow (gpm)	Conc Press (psig)	Perm Flow (gpm)	Avg Flux (gfd)	Perm Press (psig)	Boost Press (psig)	Perm TDS (mg/l)
1	BW30FR-400/34i	6	6	200.00	176.84	0.00	100.00	168.37	100.00	10.00	0.00	0.00	44.56

Pass Streams (mg/l as Ion)					
Name	Feed	Adjusted Feed	Concentrate	Permeate	
			Stage 1	Stage 1	Total
NH4+ + NH3	0.00	0.00	0.00	0.00	0.00
K	14.65	14.65	28.17	1.13	1.13
Na	508.96	508.96	1011.06	6.85	6.85
Mg	266.03	266.03	530.84	1.22	1.22
Ca	709.66	709.66	1416.15	3.17	3.17
Sr	5.42	5.42	10.82	0.02	0.02
Ba	0.05	0.05	0.10	0.00	0.00
CO3	17.54	1.58	8.59	0.00	0.00
HCO3	1185.60	1041.30	2058.71	13.17	13.17
NO3	52.08	52.08	98.68	5.48	5.48
Cl	284.15	286.09	569.68	2.51	2.51
F	2.72	2.72	5.41	0.03	0.03
SO4	2441.42	2580.47	5150.63	10.30	10.30
SiO2	119.28	119.28	237.89	0.67	0.67
Boron	0.00	0.00	0.00	0.00	0.00
CO2	15.26	130.71	133.95	131.21	131.19
TDS	5607.58	5588.29	11126.73	44.56	44.56
pH	7.89	6.90	7.11	5.26	5.26

*Permeate Flux reported by ROSA is calculated based on ACTIVE membrane area. DISCLAIMER: NO WARRANTY, EXPRESSED OR IMPLIED, AND NO WARRANTY OF MERCHANTABILITY OR FITNESS FOR A PARTICULAR PURPOSE, IS GIVEN. Neither FilmTec Corporation nor The Dow Chemical Company assume any obligation or liability for results obtained or damages incurred from the application of this information. Because use conditions and applicable laws may differ from one location to another and may change with time, customer is responsible for determining whether products are appropriate for customer's use. FilmTec Corporation and The Dow Chemical Company assume no liability, if, as a result of customer's use of the ROSA membrane design software, the customer should be sued for alleged infringement of any patent not owned or controlled by the FilmTec Corporation nor The Dow Chemical Company.

Reverse Osmosis System Analysis for FILMTEC™ Membranes ROSA 9.1 ConfigDB u399339_282
Project: PHWA PDR Case: 1
, GHD 10/23/2015

Design Warnings

-None-

Solubility Warnings

Langelier Saturation Index > 0
Stiff & Davis Stability Index > 0
CaSO4 (% Saturation) > 100%
BaSO4 (% Saturation) > 100%
CaF2 (% Saturation) > 100%
SiO2 (% Saturation) > 100%
Antiscalants may be required. Consult your antiscalant manufacturer for dosing and maximum allowable system recovery.

Stage Details

Stage 1 Element	Recovery	Perm Flow (gpm)	Perm TDS (mg/l)	Feed Flow (gpm)	Feed TDS (mg/l)	Feed Press (psig)
1	0.09	3.10	29.67	33.33	5588.29	176.84
2	0.10	2.99	34.28	30.23	6158.99	174.79
3	0.11	2.86	39.94	27.24	6830.26	173.03
4	0.11	2.73	46.97	24.38	7627.02	171.53
5	0.12	2.58	55.87	21.65	8581.13	170.27
6	0.13	2.41	67.32	19.07	9731.95	169.23

Permeate Flux reported by ROSA is calculated based on ACTIVE membrane area. DISCLAIMER: NO WARRANTY, EXPRESSED OR IMPLIED, AND NO WARRANTY OF MERCHANTABILITY OR FITNESS FOR A PARTICULAR PURPOSE, IS GIVEN. Neither FilmTec Corporation nor The Dow Chemical Company assume any obligation or liability for results obtained or damages incurred from the application of this information. Because use conditions and applicable laws may differ from one location to another and may change with time, customer is responsible for determining whether products are appropriate for customer's use. FilmTec Corporation and The Dow Chemical Company assume no liability, if, as a result of customer's use of the ROSA membrane design software, the customer should be sued for alleged infringement of any patent not owned or controlled by the FilmTec Corporation nor The Dow Chemical Company.

Scaling Calculations

	Raw Water	Adjusted Feed	Concentrate
pH	7.89	6.90	7.11
Langelier Saturation Index	1.93	0.88	1.67
Stiff & Davis Stability Index	1.61	0.56	1.08
Ionic Strength (Molal)	0.14	0.14	0.27
TDS (mg/l)	5607.58	5588.29	11126.73
HCO3	1185.60	1041.30	2058.71
CO2	15.26	130.70	133.91
CO3	17.54	1.58	8.59
CaSO4 (% Saturation)	121.73	121.71	290.92
BaSO4 (% Saturation)	720.80	720.65	1525.79
SrSO4 (% Saturation)	39.44	39.43	86.80
CaF2 (% Saturation)	697.95	697.95	5499.80
SiO2 (% Saturation)	111.05	111.05	226.56
Mg(OH)2 (% Saturation)	0.05	0.05	0.00

To balance: 1.92 mg/l Cl added to feed.

Appendix D – Grant Funding Technical Memo

October 15, 2015

Technical Memorandum:

To: Ryan Gallagher, Project Manager, KEH & Associates
From: Monica Reid, Principal Consultant, Kestrel Consulting, Inc.

Subject: Grants and Loans for Port Hueneme Water Agency 3rd Pass RO Project

As requested, Kestrel Consulting is providing a technical memorandum on the availability of grants and loans that Port Hueneme Water Agency (PHWA) could pursue to fund upgrades to the existing desalination system. It is our understanding that PHWA currently has a desalter system that was constructed as a demonstration project through a grant from the U.S. Bureau of Reclamation. This system provides two stages of salt removal, and the PHWA is interested in pursuing a $2 million upgrade project to add a third stage for optimization of brine recovery. This would improve the efficiency of the treatment system and result in an additional 200 to 250 acre feet (AF) per year of water produced. The PHWA is now looking for funding options to complete the upgrades within the existing facility.

Grants and Low Interest Loans for PHWA's Desalination Project

Kestrel has prepared a summary of relevant grants offered by the State of California and others (refer to Attachment 1 – Port Hueneme Funding Matrix). Immediate and near-term funding opportunities discussed in this memo include:

- Metropolitan Water District's Local Resources Program
- Drinking Water SRF Loan and Grant
- DWR's Water Desalination Grant Program
- DWR's Prop 1 IRWM Grant Program
- USBR's Water SMART

The Metropolitan Water District of Southern California (MWD) offers incentives through their Local Resources Program that may be pursued if the project reduces the demand for imported water deliveries. Incentives are negotiated with MWD prior to the start of project construction, and can provide, at a maximum, up to $340/AF to the PHWA over a 25-year period. These commitments are contingent upon approval by Metropolitan's Board of Directors. Incentive options differ depending on MWD's annual cost reconciliation (Incentive options are listed in the attached document). Payments begin when new water supplies are produced. The application for funding must be submitted by Calleguas MWD, since they are the MWD Member Agency. Calleguas MWD is willing to do this.

The State Water Resources Control Board (SWRCB) has a Drinking Water State Revolving Fund (DWSRF) program that will provide grants and loans for drinking water quality projects that include desalination. Funding for this program comes, in part, from Proposition 1, Chapter 5 – Clean, Safe, Reliable, Drinking Water. Low-interest loans are available for communities that are not economically disadvantaged and grants are available for projects that serve economically disadvantaged communities. The DWSRF program can provide financing for planning and

541-399-6806 monica@kestrel-inc.com www.kestrel-inc.com 1824 Cascade Ave., Hood River, OR 97031

design as well as project construction. Loans are only limited to the amount of financing an applicant can afford. The interest rate on financing agreements is currently an attractive 1% but may increase slightly in 2016. The term of the loan may be up to 30 years. When accounting for inflation, expediting a project with a loan can often present financial savings.

The California Department of Water Resources (DWR) has two grant programs that align with this project.

- The Water Desalination Grant Program is funded by Proposition 1. Draft grant guidelines are expected in December 2015. In the past, this program has had an award limit of $3 million per project. At this time, draft guidelines are not available.

- Draft grant guidelines for the Proposition 1 Integrated Regional Water Management (IRWM) Program are expected in early 2016. The desalination project fits nicely with this grant program and there is no set maximum grant award. In order to apply for this grant, PHWA must work through a regional project selection process with the Watersheds Coalition of Ventura County. This requires early engagement. Grants would be awarded in early 2017, but cannot fund construction costs retroactively.

Finally, the US Bureau of Reclamation (USBR) has a WaterSMART grant for Drought Response that is intended to support a proactive approach to drought. At this time, it is unclear when the FY 2016 grant program will open, however the desalination project is likely to be an eligible project type.

Next steps:
PHWA can immediately initiate a Local Resources Program agreement with Calleguas MWD and Metropolitan Water District.

The DWR Desalination grant program is a good opportunity. A successful proposal will require a clear understanding of environmental documents, permits, plans, and cost estimates. The RFP for this program is expected in early spring 2016.

It is not too early to apply for a low interest DWSRF loan to complete the plans, specifications, and environmental documents, water rate studies and other items needed to qualify for a construction loan.

If you have any questions, please do not hesitate to contact me at monica@kestrel-inc.com or 541-399-6806.

541-399-6806 monica@kestrel-inc.com www.kestrel-inc.com 1824 Cascade Ave., Hood River, OR 97031

Port Hueneme Water Agency Desalter Upgrade Project Funding Matrix FY 2015-2016 as of October 15, 2015 Kestrel Consulting, Inc.								
Funding Entity	**Program**	**Program Objective**	**Amount Available FY 15/16**	**Fund amounts to be awarded**	**Type**	**Draft Guidelines**	**Final Guidelines**	**Application Deadline**
State Water Resources Control Board	Drinking Water State Revolving Fund http://www.waterboards.ca.gov/drinking_water/services/funding/SRF.shtml	The DWSRF program offers low interest financing agreements for drinking water projects such as treatment and distribution systems, as well as desalination.	$260 M in Prop 1; $67.5 M allocated for 2015/16	Max of $3,000,000 construction principal forgiveness and max $500,000 planning principal forgiveness	Grants Loans	Available	Available	Continuous
Department of Water Resources	Water Desalination Grant Program http://www.water.ca.gov/desalination/2016Cycle4.cfm	DWR provides grants to local agencies for planning, design, and construction of water desalination facilities for brackish and ocean water. Grants may also be used for pilot, demonstration, and research projects.	$49,550,000	Awards from $200,000 to $3,000,000	Grant	December 2015	Spring 2016	Spring/Summer 2016
Department of Water Resources	Integrated Regional Water Management (IRWM) Proposition 1 http://www.water.ca.gov/irwm/grants/	Chapter 7 funding of Proposition 1 for regional water security, climate and drought preparedness. Includes Desalination projects. Projects that provide multiple benefits have a higher priority.	$810,000,000	No maximum or minimum amounts	Grant	Winter 2016	Spring 2016	June 2016
California Energy Commission	Water Energy Technology http://www.energy.ca.gov/contracts/index.html	Funds will be available for implementing upgrades to existing desalination plants that improve efficiency in water production and power use. Brackish water facilities are a focus for this funding. Use of innovative technology is a priority.	$0 - this program was not funded by the Legislature	$0	Grant	N/A	N/A	N/A
US Bureau of Reclamation	WaterSMART: Drought Response Grant www.usbr.gov/drought/	Supports a proactive approach to drought. Provides assistance to water users for drought contingency planning, including consideration of climate change information and to take actions that will build long-term resiliency to drought.	Dependent on Federal Funding	Funding level s for 2016 are uncertain	Grant	Possible October 2015	TBD	TBD
Metropolitan Water District	Local Resources Program www.mwdh20.com	Provide funding for development of water recycling, groundwater recovery and seawater desalination supplies that replace an existing demand or prevent a new demand on Metropolitan's imported water deliveries either through direct replacement of potable water or increased regional groundwater production.	Continuous until goal of 63,000 AFY	3 Incentive Options: 1. Sliding Scale Incentive up to $340/AF over 25 years 2. Sliding Scale Incentive up to $475/AF over 15 years 3. Fixed incentive up to $305/AF over 25 years	Incentive	Available	Available	Continuous

Appendix E – Construction Schedule

PORT HUENEME WATER AGENCY
THIRD STAGE REVERSE OSMOSIS

ID	Task Name	Duration	Start	Finish
1	**Notice to Proceed**	1 day	Fri 9/4/15	Fri 9/4/15
2	**TASK GROUP 1 PROJECT MANAGEMENT**	**116 days**	**Mon 9/7/15**	**Mon 2/15/16**
3	**Task 1.3 Meeting (5 Total)**	**116 days**	**Mon 9/7/15**	**Mon 2/15/16**
4	*Kickoff Meeting*	*5 days*	*Mon 9/7/15*	*Fri 9/11/15*
5	Draft Review Meeting	3 days	Mon 11/9/15	Wed 11/11/15
6	Final Review Meeting	3 days	Thu 12/10/15	Mon 12/14/15
7	65% Review Meeting	3 days	Thu 1/14/16	Mon 1/18/16
8	90% Review Meeting	3 days	Thu 2/11/16	Mon 2/15/16
9	**TASK GROUP 2 PRELIMINARY DESIGN**	**68 days**	**Mon 9/7/15**	**Wed 12/9/15**
10	*Task 2.1 Data Request*	*10 days*	*Mon 9/7/15*	*Fri 9/18/15*
11	*PHWA Provide Data/KEH Review*	*10 days*	*Mon 9/7/15*	*Fri 9/18/15*
12	**Task 2.2 Preliminary Design Report**	**63 days**	**Mon 9/14/15**	**Wed 12/9/15**
13	*Prepare Draft*	*28 days*	*Mon 9/14/15*	*Wed 10/21/15*
14	*Draft QC*	*7 days*	*Thu 10/22/15*	*Fri 10/30/15*
15	*Submit Draft to PHWA*	*0 days*	*Fri 10/30/15*	*Fri 10/30/15*
16	PHWA Review	5 days	Mon 11/2/15	Fri 11/6/15
17	PHWA Draft PDR Review Meeting	3 days	Mon 11/9/15	Wed 11/11/15
18	Prepare Final PDR	10 days	Wed 11/11/15	Tue 11/24/15
19	**Submit Final PDR to Board**	**0 days**	**Tue 11/24/15**	**Tue 11/24/15**
20	Prepare Presentation	10 days	Wed 11/25/15	Tue 12/8/15
21	**Final PDR Presentation (Board Meeting)**	**1 day**	**Wed 12/9/15**	**Wed 12/9/15**
22	**TASK GROUP 3 FINAL DESIGN**	**55 days**	**Thu 12/10/15**	**Wed 2/24/16**
23	**Task 3.1-3.5 Design Dwgs, Spec, Estimate**	**55 days**	**Thu 12/10/15**	**Wed 2/24/16**
24	65% Design	20 days	Thu 12/10/15	Wed 1/6/16
25	QC	5 days	Thu 1/7/16	Wed 1/13/16
26	Submit 65%	0 days	Wed 1/13/16	Wed 1/13/16
27	90% Design	15 days	Thu 1/14/16	Wed 2/3/16
28	QC	5 days	Thu 2/4/16	Wed 2/10/16
29	Submit 90%	0 days	Wed 2/10/16	Wed 2/10/16
30	Prepare Final Design	10 days	Thu 2/11/16	Wed 2/24/16
31	Submit Final	0 days	Wed 2/24/16	Wed 2/24/16
32	**TASK GROUP 4 GRANTS**	**45 days**	**Mon 9/7/15**	**Fri 11/6/15**
33	*Task 4.1 Grant Research*	*20 days*	*Mon 9/7/15*	*Fri 10/2/15*
34	Task 4.2 Grant Applications	25 days	Mon 10/5/15	Fri 11/6/15
35	**TASK GROUP 5 BID/CONSTRUCTION**	**220 days**	**Thu 2/25/16**	**Wed 12/28/16**
36	Task 5.1-5.2 Bid Phase Services	45 days	Thu 2/25/16	Wed 4/27/16
37	**Task 5.3-5.9 Construction Phase Services**	**175 days**	**Thu 4/28/16**	**Wed 12/28/16**
38	Submittals	30 days	Thu 4/28/16	Wed 6/8/16
39	Mobilization	5 days	Thu 6/9/16	Wed 6/15/16
40	RO Skid Fabrication	90 days	Thu 6/9/16	Wed 10/12/16
41	Chemical Skid Fabrication	60 days	Thu 6/9/16	Wed 8/31/16
42	Chemical System Installation	10 days	Thu 9/1/16	Wed 9/14/16
43	RO Skid Installation	10 days	Thu 10/13/16	Wed 10/26/16
44	Piping Connections	10 days	Thu 9/1/16	Wed 9/14/16
45	Electrical and Instrumentation	10 days	Thu 10/27/16	Wed 11/9/16
46	Startup Testing	10 days	Thu 11/10/16	Wed 11/23/16
47	Acceptance Testing	15 days	Thu 11/24/16	Wed 12/14/16
48	Final Review and Acceptance	10 days	Thu 12/15/16	Wed 12/28/16
49	**TASK GROUP 6 POST CONSTRUCTION**	**140 days?**	**Thu 12/29/16**	**Wed 7/12/17**
50	Task 6.1 Final Report	140 days	Thu 12/29/16	Wed 7/12/17
51				
52				
53				
54				
55				
56				

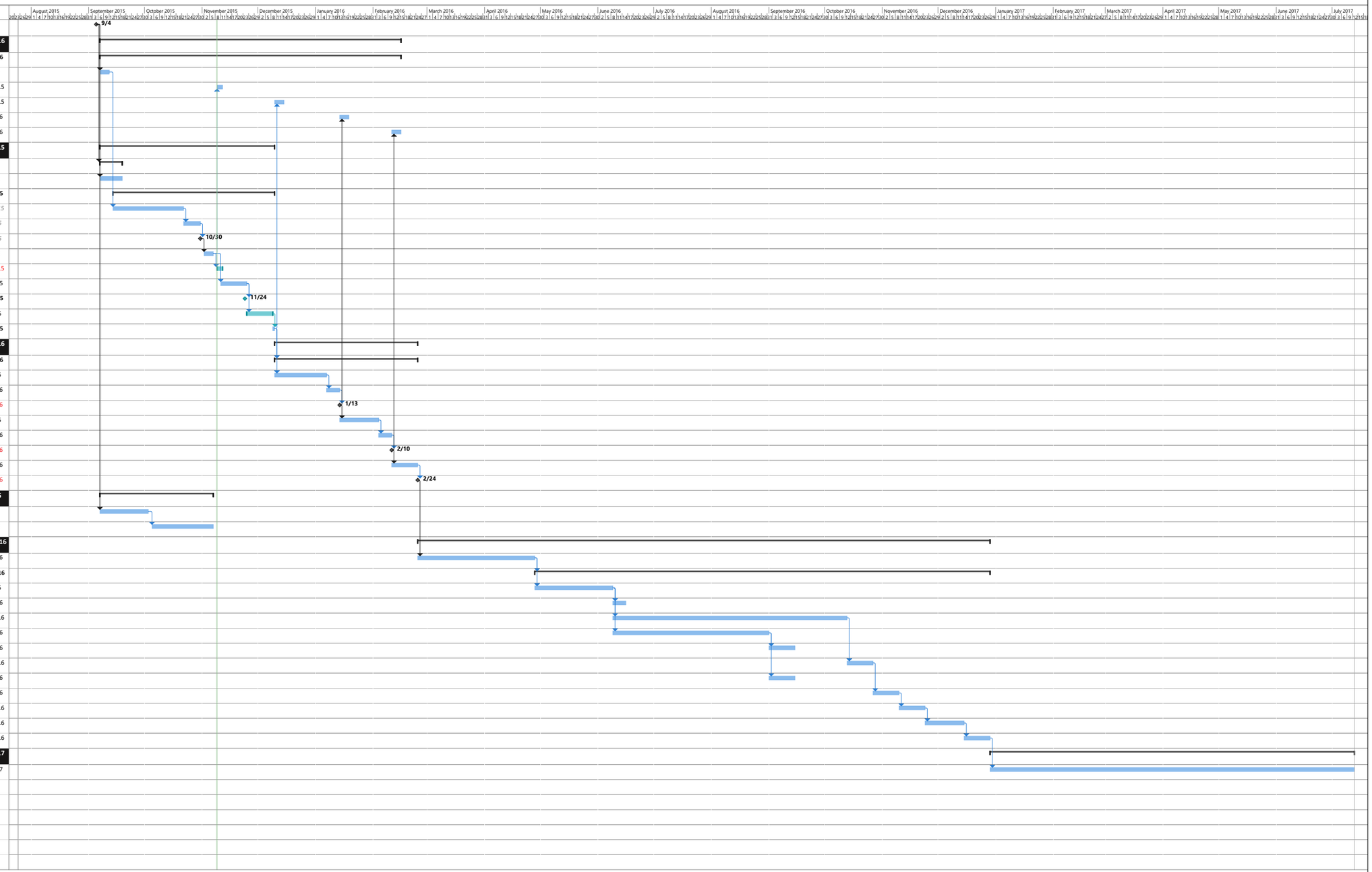

Project: Project Schedule_const
Date: Mon 11/9/15

Task | Split | Milestone | Summary | Project Summary | Inactive Task | Inactive Milestone | Inactive Summary | Manual Task | Duration-only | Manual Summary Rollup | Manual Summary | Start-only | Finish-only | External Tasks | External Milestone | Deadline | Progress | Manual Progress